BNL-101572-2014-TECH

RHIC/PG/29;BNL-101572-2013-IR

RF System Design Considerations

M. Puglisi

January 1984

Collider Accelerator Department

Brookhaven National Laboratory

U.S. Department of Energy

USDOE Office of Science (SC)

Notice: This technical note has been authored by employees of Brookhaven Science Associates, LLC under Contract No.DE-AC02-76CH00016 with the U.S. Department of Energy. The publisher by accepting the technical note for publication acknowledges that the United States Government retains a non-exclusive, paid-up, irrevocable, world-wide license to publish or reproduce the published form of this technical note, or allow others to do so, for United States Government purposes.

DISCLAIMER

This report was prepared as an account of work sponsored by an agency of the United States Government. Neither the United States Government nor any agency thereof, nor any of their employees, nor any of their contractors, subcontractors, or their employees, makes any warranty, express or implied, or assumes any legal liability or responsibility for the accuracy, completeness, or any third party's use or the results of such use of any information, apparatus, product, or process disclosed, or represents that its use would not infringe privately owned rights. Reference herein to any specific commercial product, process, or service by trade name, trademark, manufacturer, or otherwise, does not necessarily constitute or imply its endorsement, recommendation, or favoring by the United States Government or any agency thereof or its contractors or subcontractors. The views and opinions of authors expressed herein do not necessarily state or reflect those of the United States Government or any agency thereof.

RF SYSTEM DESIGN CONSIDERATIONS

For

RHIC

M. Puglisi

(BNL, January 27, 1984)

M. PUGLISI

RF SYSTEM DESIGN CONSIDERATIONS

a) - ENERGY STORAGE IN THE CAVITY

BECAUSE OF THE RADIAL CONSTRAINTS we CONSIDER ONLY FORESHORTENED COAXIAL CAVITIES.

Let L AND Z_0 be THE INDUCTANCE PER METER AND THE CHARACTERISTIC IMPEDANCE OF THE LINE. (Henry/meter ; ohms).

We CAN WRITE :

$$L = \frac{\mu_0}{2\pi} \ln \frac{R_2}{R_1} = \sqrt{\varepsilon_0 \mu_0} \frac{1}{2\pi} \sqrt{\frac{\mu_0}{\varepsilon_0}} \ln \frac{R_2}{R_1} = \frac{Z_0}{c} \qquad (1)$$

where $c = 2.9979\,E8$ IS THE SPEED OF LIGHT

ASSUME THAT WE CONSIDER a SIMPLE $\lambda/4$ COAX. CAVITY

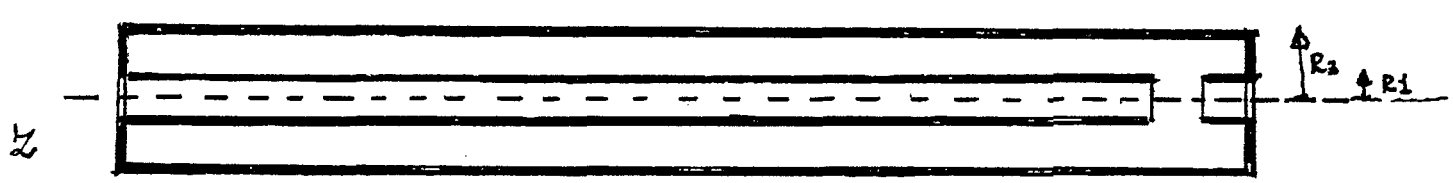

IF THE GAP CAPACITY IS NEGLIGIBLE WE HAVE :

$$I(z) = \frac{V_0}{Z_0} \cos \beta z \qquad (2)$$

WHERE λ IS THE RESONANT WAVE LENGTH.

AND: -

$$\begin{cases} V_0 = \text{GAP VOLTAGE} & [\text{VOLT}] \\ \omega = \text{RADIAN FREQUENCY} & [\text{RAD/SEC}] \\ \beta = \dfrac{2\pi}{\lambda} = \dfrac{2\pi}{cT} = \dfrac{\omega}{c} & [\text{RAD/METER}] \end{cases}$$

<u>AT RESONANCE</u> THE STORED ENERGY IS AS FOLLOWS:

$$E_S = \frac{1}{2} L \int_0^{\lambda/4} I^2(z)\,dz = \frac{1}{2}\frac{Z_0}{c}\left(\frac{V_0}{Z_0}\right)^2 \int_0^{\lambda/4} \cos^2 \beta z\,dz$$

INTEGRATING we obtain:

$$E_S = \frac{1}{16}\frac{V_0^2}{Z_0 \nu} = \frac{1}{16}\frac{V_0^2}{c Z_0}\lambda \qquad (3)$$

THE STORED ENERGY INCREASES WITH THE WAVELENGTH.

THE SITUATION DOES NOT CHANGE VERY MUCH IN THE CASE OF A COAX. CAVITY WITH A CAPACITIVE LOAD ON THE GAP.

ACCORDING TO THE "NORMAL" SCHEME AS SKETCHED IN THE FIGURE WE HAVE.

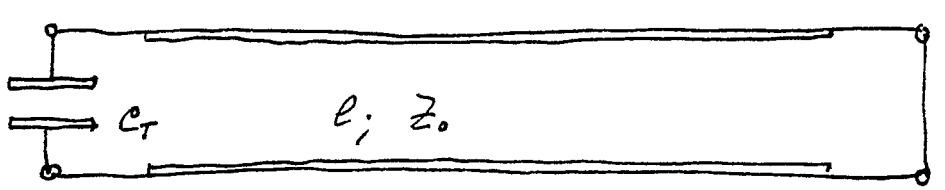

$$\begin{cases} I(z) = -j \dfrac{V_0}{Z_0 \sin\beta\ell} \cos\beta z \\[2ex] C_T = \dfrac{1}{\omega Z_0 \operatorname{tg} \dfrac{\omega \ell}{c}} \end{cases} \qquad (4)$$

$= $ TUNING CAPACITOR

THE STORED ENERGY IS NOW:

$$E_S = \frac{V_0}{2} \frac{1}{c Z_0 \sin^2 \beta\ell} \int_0^{\ell} \cos^2 \beta z \, dz$$

INTEGRATING WE OBTAIN:

$$E_S = \frac{1}{16} \frac{V_0^2}{c Z_0} \lambda \frac{2\beta\ell + \sin 2\beta\ell}{\pi \cdot \sin^2 \beta\ell} \qquad (5)$$

THE PREVIOUS EQ. CAN BE WRITTEN AS FOLLOWS

$$E_S = E_s(\lambda/4) * \chi$$

WHERE χ (THE LOADING FORM FACTOR) IS GIVEN IN THE FOLLOWING TABLE. ($\beta\ell$ IN DEGREES).

FOR $\beta\ell = 60°$ we have $\chi = 1.256$ AND

FOR $\beta\ell = 90°$ $\chi = 1.0$ AS EXPECTED

EL. LENGTH (DEG).	χ
0.1000E+02	0.7295E+01
0.1100E+02	0.6632E+01
0.1200E+02	0.6080E+01
0.1300E+02	0.5612E+01
0.1400E+02	0.5211E+01
0.1500E+02	0.4864E+01
0.1600E+02	0.4560E+01
0.1700E+02	0.4292E+01
0.1800E+02	0.4054E+01
0.1900E+02	0.3841E+01
0.2000E+02	0.3649E+01
0.2100E+02	0.3475E+01
0.2200E+02	0.3318E+01
0.2300E+02	0.3174E+01
0.2400E+02	0.3042E+01
0.2500E+02	0.2920E+01
0.2600E+02	0.2809E+01
0.2700E+02	0.2705E+01
0.2800E+02	0.2609E+01
0.2900E+02	0.2519E+01
0.3000E+02	0.2436E+01
0.3100E+02	0.2358E+01
0.3200E+02	0.2285E+01
0.3300E+02	0.2216E+01
0.3400E+02	0.2152E+01
0.3500E+02	0.2091E+01
0.3600E+02	0.2034E+01
0.3700E+02	0.1980E+01
0.3800E+02	0.1929E+01
0.3900E+02	0.1880E+01
0.4000E+02	0.1834E+01
0.4100E+02	0.1791E+01
0.4200E+02	0.1749E+01
0.4300E+02	0.1710E+01
0.4400E+02	0.1672E+01
0.4500E+02	0.1637E+01
0.4600E+02	0.1603E+01
0.4700E+02	0.1570E+01
0.4800E+02	0.1539E+01
0.4900E+02	0.1509E+01
0.5000E+02	0.1481E+01
0.5100E+02	0.1454E+01
0.5200E+02	0.1428E+01
0.5300E+02	0.1403E+01
0.5400E+02	0.1379E+01
0.5500E+02	0.1356E+01
0.5600E+02	0.1335E+01
0.5700E+02	0.1314E+01
0.5800E+02	0.1294E+01
0.5900E+02	0.1275E+01
0.6000E+02	0.1256E+01
0.6100E+02	0.1239E+01
0.6200E+02	0.1222E+01
0.6300E+02	0.1206E+01
0.6400E+02	0.1191E+01
0.6500E+02	0.1176E+01
0.6600E+02	0.1162E+01

$

EL. ENGTH (DEG).	χ
0.6700E+02	0.1149E+01
0.6800E+02	0.1136E+01
0.6900E+02	0.1124E+01
0.7000E+02	0.1113E+01
0.7100E+02	0.1102E+01
0.7200E+02	0.1091E+01
0.7300E+02	0.1082E+01
0.7400E+02	0.1072E+01
0.7500E+02	0.1064E+01
0.7600E+02	0.1056E+01
0.7700E+02	0.1048E+01
0.7800E+02	0.1041E+01
0.7900E+02	0.1035E+01
0.8000E+02	0.1029E+01
0.8100E+02	0.1023E+01
0.8200E+02	0.1019E+01
0.8300E+02	0.1014E+01
0.8400E+02	0.1011E+01
0.8500E+02	0.1007E+01
0.8600E+02	0.1005E+01
0.8700E+02	0.1003E+01
0.8800E+02	0.1001E+01
0.8900E+02	0.1000E+01
0.9000E+02	0.1000E+01

```
      OPEN(UNIT=7,STATUS='NEW')
      P2=4.*ATAN(1.)
      DO  10 I=10,90
      F=P2/180.
      ARG=F*I
      F1=2*ARG
      F2=SIN(F1)
      F3=(SIN(ARG))**2.
      FW=(F1+F2)/(P2*F3)
      FF=FW*P2
      A=I+0.00001
      WRITE(7,20) A,FW,FF
20    FORMAT(5X,3E20.4)
10    CONTINUE
      CLOSE(UNIT=7,STATUS='SAVE')
      STOP
      END
$
```

$\chi \equiv FW$

b) POWER LOSSES (GENERAL CONSIDERATIONS)..

FOR THE UNLOADED COAX. CAVITY ($\ell = \lambda/4$) THE LOSSES ARE AS FOLLOWS.*

$$W = \frac{1}{2} R_s \left(\frac{V_0}{Z_0}\right)^2 \left(\frac{1}{2\pi R_1} + \frac{1}{2\pi R_3}\right) \int_0^{\lambda/4} I^2(z)\, dz =$$

$$= \frac{1}{2} \frac{V_0^2}{Z_0} \frac{R_s}{Z_0} * \frac{1}{16\pi}\left(\frac{\lambda}{R_1} + \frac{\lambda}{R_3}\right) \qquad (6)$$

WHERE $R_s = \sqrt{\pi \mu \nu / \sigma}$ $[\Omega \square]$ (7)

IS THE WELL KNOWN SURFACE RESISTANCE OF THE CAVITY WALLS.

(CU: $R_s = 2.61E-7 * \sqrt{\nu}$; AL: $R_s = 3.3E-7 * \sqrt{\nu}$)

TAKING INTO ACCOUNT THAT THE SURFACE RESISTANCE IS PROPOPORTIONAL TO $1/\sqrt{\lambda}$ IT FOLLOWS THAT THE <u>LOSSES INCREASE WITH SQUARE ROOT OF THE WAVELENGTH</u>.

---

* THE LOSSES ON THE SHORT CIRCUITED END ARE IGNORED FOR THIS PRELIMINARY EVALUATION..

C) _ THE CAVITY INNER RADIUS R1

WE CONSIDER THE POWER DISSIPATION AS APPEARS IN FORMULA ⑥ HAVING IN MIND THAT R_3 IS DICTATED BY THE GEOMETRY OF THE MACHINE WHILE λ AND V_0 ARE ALREADY SPECIFIED BY BEAM DYNAMICS CONSIDERATIONS. THIS MEANS THAT THE LOSSES COULD BE MINIMIZED BY CHOSING THE RATIO $x = R3/R1$ PROPERLY.

IN FACT ⑥ CAN BE REWRITTEN AS FOLLOWS:

$$W = \frac{1+x}{\ln^2 x} * K \qquad ⑧$$

WHERE K IS A CONSTANT. $(Z_0 = 60 * \ln x)$

THE FUNCTION $y = \dfrac{1+x}{\ln^2 x}$ (9)

IS TABULATED BELOW:

x	y	x	y	x	y
1.1	231.17	1.9	7.039	3.	3.314
1.2	66.18	2.0	6.244	4.	2.601
1.3	33.41	2.1	5.631	5.	2.31
1.4	21.19	2.2	5.147	6.	2.18
1.5	15.20	2.3	4.756	7.	2.11
1.6	11.76	2.4	4.436	8.	2.08
1.7	9.58	2.5	4.16	9.	2.071339
1.8	8.10	2.6	3.94	10.	2.074729

AND IT IS SEEN THAT A VERY BROAD MINIMUM OCCURS at $x = 9.8632$ WHERE $y = 2.071122$. In OUR CASE THE BORE TUBE RADIUS IS EQUAL TO 3 cm., CONSEQUENTLY, THE INNER ELECTRODE OF THE CAVITY CANNOT BE SMALLER THAN 4 cm.. THE OUTER RADIUS OF THE CAVITY SHOULD BE NOT LARGER THAN 21 cm AND WE HAVE $x = 21/4 = 5.25$, $y = 2.2729$ WHICH IS NOT VERY FAR FROM THE MINIMUM.

MOREOVER WE COULD CHOOSE $\beta\lambda = 1.047$ (WHICH MEANS AN ELECTRICALLENGTH OF THE CAVITY EQUAL TO 60°) and the CAVITY MECHANICAL LENGTH ℓ WOULD be:

$$\ell = \frac{49.965}{\nu} \qquad (10)$$

WHERE THE FREQUENCY ν IS IN MEGAHERTZ. ONE FINDS FROM THE ABOVE FORMULA FOR $25 \leq \nu \leq 55$ MHz THAT $0.90 \leq \ell \leq 1.99$ meters..

IF. THE CAVITY LENGTH SHOULD BE NEAR TO ~ 2 meters then R1 SHOULD BE, AT LEAST, EQUAL TO 5 cm ; THE RATIO x BECOMES EQUAL TO 4.2

and $y = 2.52$ IS STILL AN ACCEPTABLE VALUE.

MANY OTHER FACTORS SHOULD BE TAKEN INTO ACCOUNT BEFORE DECIDING UPON THE FINAL SHAPE OF THE CAVITY BUT IT IS CLEAR FROM (9) THAT VALUES OF x SMALLER THAN 4 ARE NOT ADVISABLE.

d) _ OPTIONS FOR THE ACC. CAVITIES _

THE BASIC SECTION OF THE ACC. CAVITY IS GIVEN IN FOLLOWING SKETCH:

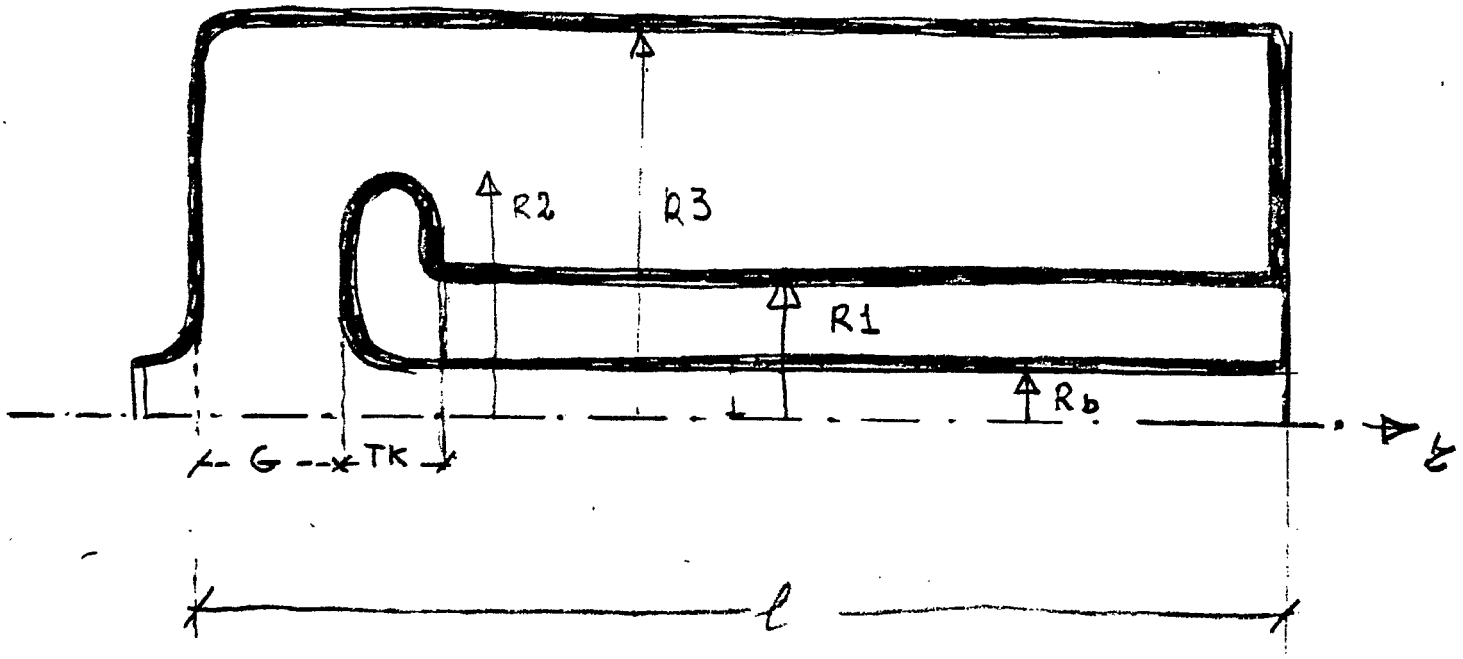

WHERE, AS MENTIONED ABOVE, R3 CANNOT BE LARGER THAN 21 cm and R_b CANNOT BE SMALLER THAN 3 cm ..

d 1) _ WORKING FREQ 50 MH_z . . HIGH CHARACT. IMPEDANCE.

ACCORDING TO THE PREVIOUS CALCULATIONS we minimize the losses by REDUCING R1. BECAUSE FOR $\nu = 50$ MHz $\lambda/4 = 1.5$ METERS

THE INNER ELECTRODE SHOULD NOT BE LONGER THA 1.3 METER. ASSUMING R1 = 4 THE INNER ELECTRODE CAN BE CANTILEVERED AT THE SHORTED END AND WE HAVE:

$$\begin{cases} \ell = 1.30 & ; \text{GAP} = 0.04 \\ R_3 = 0.21 & \text{TK} = 0.02 \\ R2 = 0.08 & \\ R1 = 0.04 & \end{cases}$$

THE RESULTS OF A SUPERFISH ANALYSIS ARE GIVEN ON PAGES 10 - 11 - 12.

FOR THE S.F. VOLTAGE OF 100 KV THE CALCULATED POWER IS 3.887 KW WICH IMPLIES A SHUNT IMPEDANCE R_{sh} EQUAL TO:

$$R_{sh} = \frac{(100.000)^2}{2 \times 3.887 E3} = 1.286 \text{ M}\Omega$$

FOR 200 KV, THAT IS STILL TOLERABLE WITH a 4 cm GAP We have:

$$W = \frac{(200.000)^2}{2 * R_{sh}} = 15.522 \text{ kW}$$

```
RUG HIGH Z0
*2  2 *21  1 0 1 1 *9   1.0000
*36 16 *37  1 SKIP
   1   1   1   0  13   1
  13   1   1   0  17   1
  17   1   0   1  17   8
  17   8  -1   0  13   8
  13   8  -1   0  11   8
  11   8  -1   0   9  10
   9  10   0   1   9  17
   9  17   1   1  13  17
  13  17   0  -1  13  10
  13  10   1   0 137  10
 137  10   0   1 137  17
 137  17   0   1 137  33
 137  33  -1   0  13  33
  13  33  -1   0   1  33
   1  33   0  -1   1  17
   1  17   0  -1   1   1
  1  1       0.0000       0.0000  0  1 REGION
   1   1     0.0000     0.0000
  13   1     6.0000     0.0000
  17   1    10.0000     0.0000
  17   8    10.0000     3.0000
  13   8     6.0000     3.0000
  11   8     5.0000     3.0000
  10   8     4.5000     3.1340
   9   9     4.1340     3.5000
   9  10     4.0000     4.0000
   9  17     4.0000     7.0000
  10  18     4.1910     7.5878
  11  18     4.6910     7.9511
  12  18     5.3090     7.9511
  13  18     5.8090     7.5878
  13  17     6.0000     7.0000
  13  10     6.0000     4.0000
 137  10   130.0000     4.0000
 137  17   130.0000     7.0000
 137  33   130.0000    21.0000
  13  33     6.0000    21.0000
   1  33     0.0000    21.0000
   1  17     0.0000     7.0000
   1   1     0.0000     0.0000 COUN
 2   1  1.0    0.00    0  -1   REGION
 137  33   130.0000    21.00  COUN
```

F = 50.05% Hz

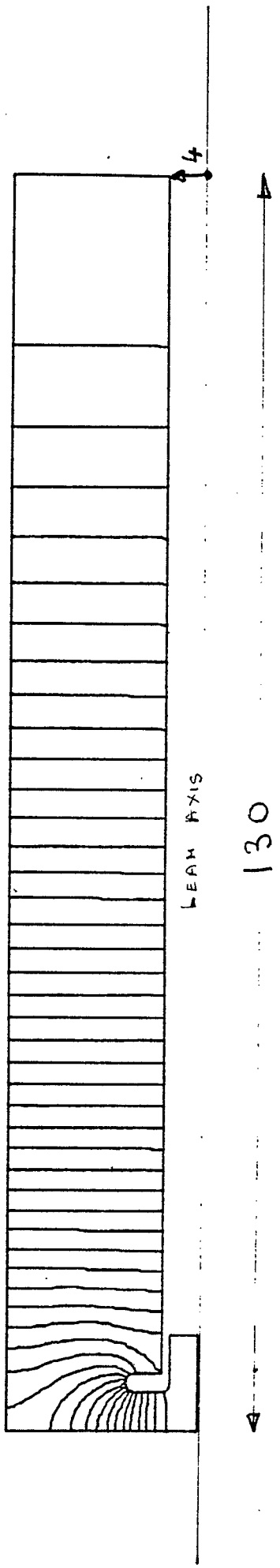


```
XRUG HIGH Z0
 $REG NREG=1,DX=0.5,XMAX=140.,YMAX=22.,
 XREG1=6.0,YREG1=7.0,NPOINT=12$
 $PO X=0.0,Y=0.0$
 $PO X=10.0,Y=0.0$
 $PO X=10.0,Y=3.0$
 $PO X=5.0,Y=3.0$
 $PO NT=2,X0=5.0,Y0=4.0,R=1.0,THETA=-180.0$
 $PO X=4.0,Y=7.0$
 $PO NT=2,X0=5.0,Y0=7.0,R=1.0,THETA=0.0$
 $PO X=6.0,Y=4.0$
 $PO X=130.,Y=4.0$
 $PO X=130.,Y=21.0$
 $PO X=0.0,Y=21.0$
 $PO X=0.0,Y=0.0$
$
```

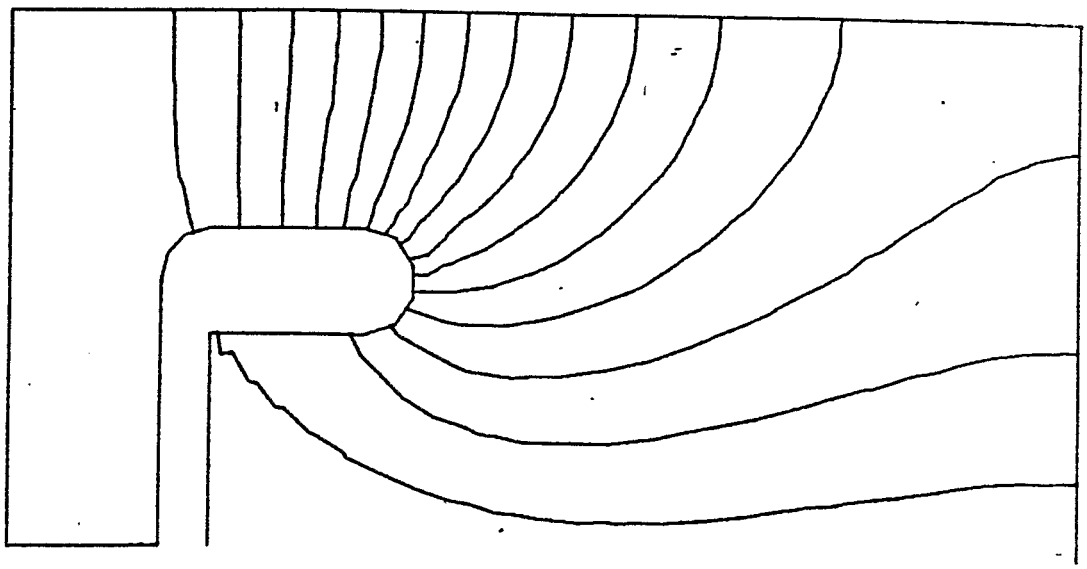

```
P
00100    XRUG HIGH Z0
00200     $REG NREG=1,DX=0.5,XMAX=140.,YMAX=22.,
00300     XREG1=6.0,YREG1=7.0,NPOINT=12$
00400     $PO X=0.0,Y=0.0$
00500     $PO X=10.0,Y=0.0$
00600     $PO X=10.0,Y=3.0$
00700     $PO X=5.0,Y=3.0$
00800     $PO NT=2,X0=5.0,Y0=4.0,R=1.0,THETA=-180.0$
00900     $PO X=4.0,Y=7.0$
01000     $PO NT=2,X0=5.0,Y0=7.0,R=1.0,THETA=0.0$
01100     $PO X=6.0,Y=4.0$
01200     $PO X=130.,Y=4.0$
01300     $PO X=130.,Y=21.0$
01400     $PO X=0.0,Y=21.0$
01500     $PO X=0.0,Y=0.0$
*EBT
```

F = 50.057 MHz

SUPERFISH OUTPUT SUMMARY 15:21:41 17-JAN-8

PROBLEM NAME =RUG HIGH Z0

CAVITY LENGTH = 20.000 CM CAVITY DIAMETER = 42.000 CM

D.T. GAP = 20.000 CM STEM RADIUS = 1.000 CM

FREQUENCY (STARTING VALUE = 50.057) = 50.057 MHZ

BETA = 0.0000 PROTON ENERGY = 0.000 MEV

NORMALIZATION FACTOR (E0=1 MV/M) ASCALE = 3015.0

STORED ENERGY (MESH PROBLEM ONLY) = 0.1380 JOULES

POWER DISSIPATION (MESH PROBLEM ONLY) = 3887.29 WATTS

T,TP,TPP,S,SP,SPP = 0.000 0.000 0.000 0.000 0.000 0.000

Q = 11165 SHUNT IMPEDANCE = 25.72 MOHM/M

PRODUCT Z*T**2 ZTT = 0.00 MOHM/M

MAGNETIC FIELD ON OUTER WALL = 800 AMP/M

MAXIMUM ELECTRIC FIELD ON BOUNDARY = 4.808 MV/M

ISEG	ZBEG (CM)	RBEG (CM)	ZEND (CM)	REND (CM)	EMAX (MV/M)	POWER (W)		D-FREQ (DELZ)	D-FREQ (DELR)
3	10.000	0.000	10.000	3.000	0.0436	1.48E-06	WALL	0.0000	0.0000
4	10.000	3.000	6.000	3.000	0.2107	1.25E-04	WALL	0.0000	0.0001
5	6.000	3.000	5.000	3.000	0.7743	5.74E-04	WALL	0.0000	0.0006
6	5.000	3.000	4.000	4.000	3.2963	1.61E-02	WALL	0.0151	0.0090
7	4.000	4.000	4.000	7.000	3.8047	3.99E-01	WALL	0.0888	0.0000
8	4.000	7.000	6.000	7.000	4.8079	2.84E+00	WALL	0.0000	0.1387
9	6.000	7.000	6.000	4.000	2.0499	7.62E+00	WALL	0.0095	0.0000
10	6.000	4.000	130.000	4.000	1.4356	3.02E+03	WALL	0.0000	-0.1434
11	130.000	4.000	130.000	7.000	0.6479	9.14E+01	WALL	-0.0097	0.0000
12	130.000	7.000	130.000	21.000	0.2530	1.79E+02	WALL	-0.0219	0.0000
13	130.000	21.000	6.000	21.000	0.2816	5.75E+02	WALL	0.0000	-0.0248
14	6.000	21.000	0.000	21.000	0.1968	3.13E+00	WALL	0.0000	0.0006
15	0.000	21.000	0.000	7.000	1.9148	6.68E+00	WALL	0.0491	0.0000
16	0.000	7.000	0.000	0.000	2.3523	3.54E-01	WALL	0.0633	0.0000

DUMP NUMBER 1 HAS BEEN WRITTEN.

$

THE STORED ENERGY E_s, FROM SF, IS EQUAL TO 0.138 JOULES. (FOR 200 KV E_s BECOMES EQUAL TO 0.552 JOULES)

FROM EQ (5) WE OBTAIN: (AS A CHECK).

$$E_s = \frac{1}{16} * \frac{(2E5)^2}{2.9979E8 * 99.49} * 6 * \chi = 0.5029\chi$$

IN THIS CASE THE ELECTRICAL LENGTH IS EQUAL TO $1.30 - (0.04 + 0.02) = 1.24$ m.

$\beta l = 2\pi \frac{l}{\lambda} = 74.4°$; $\chi = 1.07$. CONSEQUENTLY

$$E_s = 0.5029 * 1.07 = 0.538$$

IN A <u>VERY</u> GOOD AGREEMENT WITH THE S.F. CALCULATIONS.

WE COULD REASONABLY ASSUME TO WASTE 20 KW PER CAVITY ; THE ACTUAL SHUNT IMPEDANCE BECOMES :

$$R_{sh} = \frac{(2E5)^2}{2 * 2E4} = 1 \text{ M}\Omega$$

d 2) WORKING FREQ. 50 MHz. LOW CHARACT. IMPEDANCE.

INCREASING THE INNER RADIUS R1 TO 6 cm WE OBTAIN THE FOLLOWING CAVITY.

$$\begin{cases} \ell = 1.30 & \text{GAP} = 0.04 \quad \text{TK} = 0.04 \\ R3 = 0.21 \\ R2 = 0.09 \end{cases}$$

THE RESONANT FREQUENCY IS 50.957 KHz AND FOR 200 ~~MHz~~ KV THE REQUESTED POWER IS EQUAL TO 18.860 KW. (THE SHUNT IMPEDANCE IS NOW EQUAL TO 1.060 MΩ). THE STORED ENERGY IS INCREASED TO 0.692 JOULES. ON PAGES 15-16-17-18 THE MOST IMPORTANT S.F. RESULTS ARE GIVEN.

ON PAGE 17 THE AXIAL GRADIENT IS LISTED BECAUSE THE REPRESENTATION USED BY S.F. (IN CYLINDRICAL COORDINATES) COULD BE MISUNDERSTOOD.

WE see that THIS CAVITY DOES NOT show ANY PECULIAR MERIT IN FRONT OF THE PRVIOUS ONE. We PAY THE PRICE OF INCREASING THE INNER TUBE RADIUS.

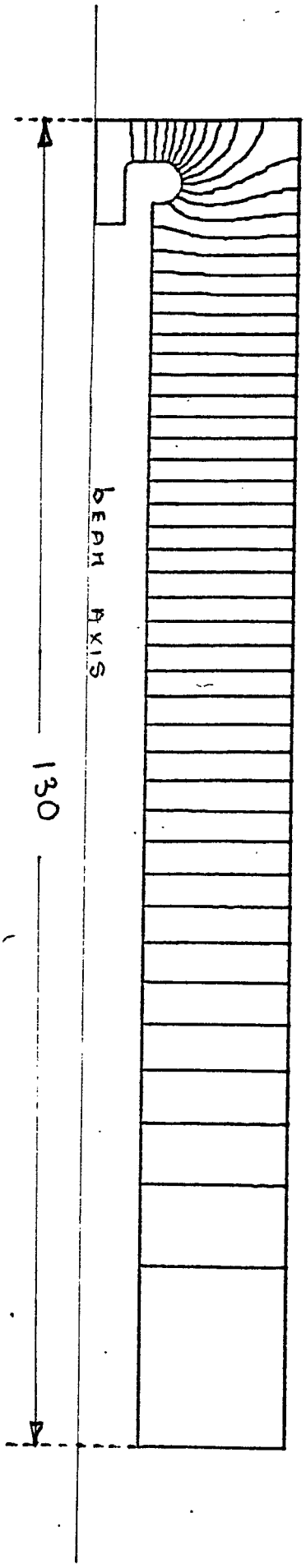


```
RUG HIGH Z0
*2  2 *21  1 0 1 1 *9   1.0000
*36 16 *37  1 SKIP
   1   1   1   0  17   1
  17   1   1   0  19   1
  19   1   0   1  19   7
  19   7   0   1  17   8
  17   8  -1   0  11   8
  11   8  -1   0   9  10
   9  10   0   1   9  17
   9  17   0   1  17  17
  17  17   0  -1  17  14
  17  14   1   0 139  15
 139  15   0   1 139  19
 139  19   0   1 139  34
 139  34  -1   0  17  34
  17  34  -1   0   1  34
   1  34   0  -1   1  19
   1  19   0  -1   1   1
  1  1        0.0000       0.0000  0  1 REGION
   1   1     0.0000     0.0000
  17   1     8.0000     0.0000
  19   1    10.0000     0.0000
  19   7    10.0000     3.0000
  19   8     9.3333     3.0000
  17   8     8.0000     3.0000
  11   8     5.0000     3.0000
  10   8     4.5000     3.1340
   9   9     4.1340     3.5000
   9  10     4.0000     4.0000
   9  17     4.0000     7.0000
   9  18     4.0681     7.5176
   9  19     4.2679     8.0000
  10  19     4.5858     8.4142
  11  20     5.0000     8.7321
  12  20     5.4824     8.9319
  13  20     6.0000     9.0000
  14  20     6.5176     8.9319
  15  20     7.0000     8.7321
  16  20     7.4142     8.4142
  16  19     7.7321     8.0000
  17  18     7.9319     7.5176
  17  17     8.0000     7.0000
  17  14     8.0000     6.0000
 139  14   129.0000     6.0000
 139  15   130.0000     6.0000
 139  19   130.0000     8.0000
 139  34   130.0000    21.0000
  17  34     8.0000    21.0000
   1  34     0.0000    21.0000
   1  19     0.0000     8.0000
   1   1     0.0000     0.0000 COUN
 2  1    1.00  0.00  0  -1     REGION
 139  34  130.0000    21.0000 COUN
$
```

F = 50.957 MHz

uperfish BNL Version 1.1 6 Aug 82

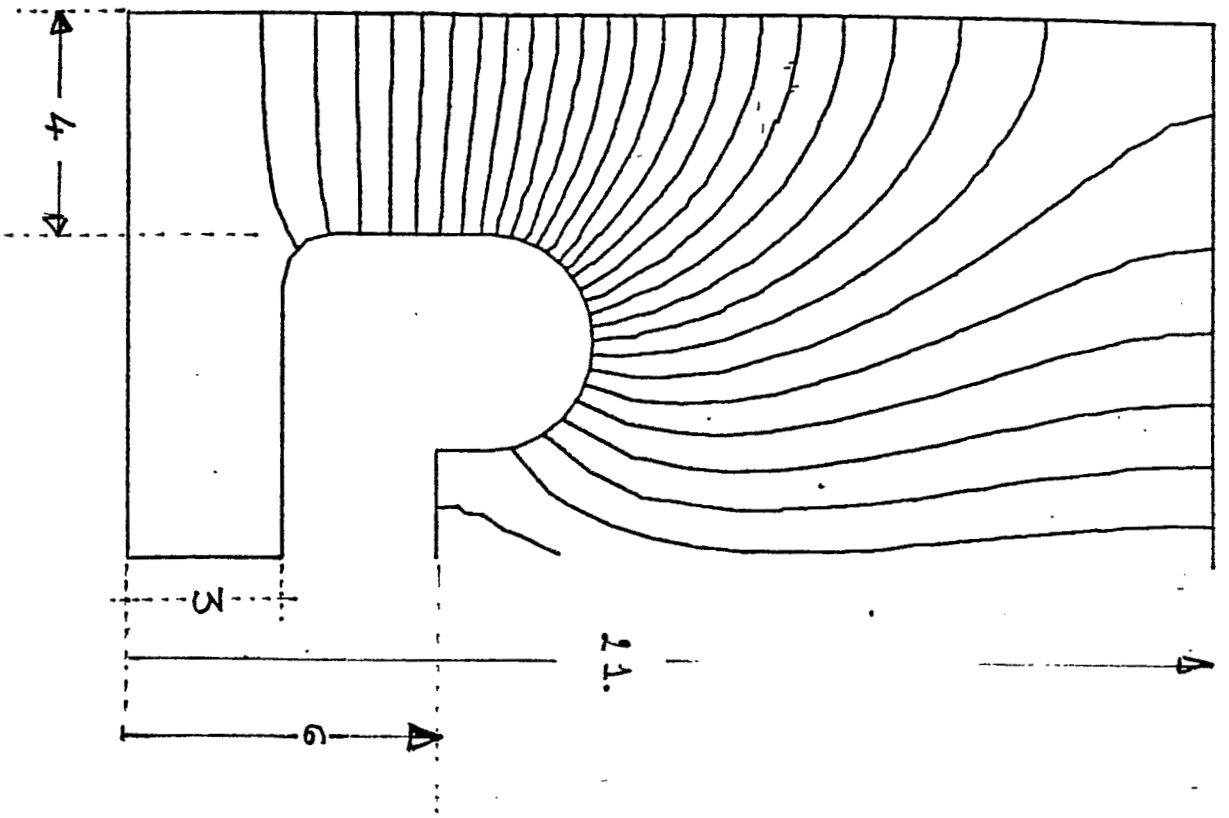


```
EDIT/SOS RUG.;1
Input assumed unsequenced
Edit: DRA1:[VACUUM0]RUG;1
*P
00100    XRUG HIGH Z0
00200     $REG NREG=1,DX=0.5,XMAX=140.,YMAX=22.,
00300     XREG1=8.0,YREG1=8.0,NPOINT=12$
00400     $PO X=0.0,Y=0.0$
00500     $PO X=10.0,Y=0.0$
00600     $PO X=10.0,Y=3.0$
00700     $PO X=5.,Y=3.0$
00800     $PO NT=2,X0=5.,Y0=4.0,R=1.0,THETA=-180.0$
00900     $PO X=4.,Y=7.0$
01000     $PO NT=2,X0=6.,Y0=7.,R=2.0,THETA=0.0$
01100     $PO X=8.0,Y=6.0$
01200     $PO X=130.,Y=6.0$
01300     $PO X=130.,Y=21.0$
01400     $PO X=0.0,Y=21.0$
01500     $PO X=0.0,Y=0.0$
*
```

F = 50.957 MHz

ELECTRIC FIELD ALONG THE L = 1 R = 0.000 F = 50.957 MHz

K	Z(CM)	EZ(V/M)
1	0.0000	
		2.1864E+06
2	0.5000	
		2.1672E+06
3	1.0000	
		2.1264E+06
4	1.5000	
		2.0600E+06
5	2.0000	
		1.9624E+06
6	2.5000	
		1.8281E+06
7	3.0000	
		1.6539E+06
8	3.5000	
		1.4425E+06
9	4.0000	
		1.2051E+06
10	4.5000	
		9.6101E+05
11	5.0000	
		7.3207E+05
12	5.5000	
		5.3509E+05
13	6.0000	
		3.7762E+05
14	6.5000	
		2.5959E+05
15	7.0000	
		1.7183E+05
16	7.5000	
		1.0926E+05
17	8.0000	
		6.6354E+04
18	9.0000	
		4.4990E+04
19	10.0000	

```
PUG HIGH Z0
REG NREG=1,DX=0.5,XMAX=140.,
XREG1=8.0,YREG1=8.0,NPOINT=12
$PO X=0.0,Y=0.0$
$PO X=10.0,Y=0.0$
$PO X=10.0,Y=3.0$
$PO X=5.,Y=3.0$
$PO NT=2,X0=5.,Y0=4.0,R=1.0,T
$PO X=4.,Y=7.0$
$PO NT=2,X0=6.,Y0=7.,R=2.0,TH
$PO X=8.0,Y=6.0$
$PO X=130.,Y=6.0$
$PO X=130.,Y=21.0$
$PO X=0.0,Y=21.0$
$PO X=0.0,Y=0.0$
$
```

INTEGRAL ALONG THE L = 1 R = 0.000

INTEGRAL E(Z)*DZ = 1.0000E+05 (VOLTS)

STORED ENERGY = 1.732E-01 (JOULES)

SUPERFISH OUTPUT SUMMARY 21:18:20 19-JAN-8

PROBLEM NAME =RUG HIGH Z0

CAVITY LENGTH = 20.000 CM CAVITY DIAMETER = 42.000 CM

D.T. GAP = 20.000 CM STEM RADIUS = 1.000 CM

FREQUENCY (STARTING VALUE = 48.000) = 50.957 MHZ

BETA = 0.0000 PROTON ENERGY = 0.000 MEV

NORMALIZATION FACTOR (E0=1 MV/M) ASCALE = 3921.1

STORED ENERGY (MESH PROBLEM ONLY) = 0.1732 JOULES

POWER DISSIPATION (MESH PROBLEM ONLY) = 4715.01 WATTS

T,TP,TPP,S,SP,SPP = 0.000 0.000 0.000 0.000 0.000 0.000

Q = 11762 SHUNT IMPEDANCE = 21.21 MOHM/M

PRODUCT Z*T**2 ZTT = 0.00 MOHM/M

MAGNETIC FIELD ON OUTER WALL = 1040 AMP/M

MAXIMUM ELECTRIC FIELD ON BOUNDARY = 4.165 MV/M

ISEG	ZBEG (CM)	RBEG (CM)	ZEND (CM)	REND (CM)	EMAX (MV/M)	POWER (W)		D-FREQ (DELZ)	D-FREQ (DELR)
3	10.000	0.000	10.000	3.000	0.0450	1.64E-06	WALL	0.0000	0.0000
4	10.000	3.000	8.000	3.000	0.0412	5.82E-06	WALL	0.0000	0.0000
5	8.000	3.000	5.000	3.000	0.7597	6.97E-04	WALL	0.0000	0.0005
6	5.000	3.000	4.000	4.000	3.2160	1.62E-02	WALL	0.0117	0.0070
7	4.000	4.000	4.000	7.000	3.2477	3.78E-01	WALL	0.0587	0.0000
8	4.000	7.000	8.000	7.000	4.1654	9.27E+00	WALL	0.0000	0.1412
9	8.000	7.000	8.000	6.000	0.7625	3.44E+00	WALL	0.0003	0.0000
10	8.000	6.000	130.000	6.000	1.2562	3.37E+03	WALL	0.0000	-0.1234
11	130.000	6.000	130.000	8.000	0.3942	8.02E+01	WALL	-0.0074	0.0000
12	130.000	8.000	130.000	21.000	0.2076	2.69E+02	WALL	-0.0266	0.0000
13	130.000	21.000	8.000	21.000	0.3713	9.63E+02	WALL	0.0000	-0.0320
14	8.000	21.000	0.000	21.000	0.3177	6.13E+00	WALL	0.0000	0.0024
15	0.000	21.000	0.000	8.000	1.8434	8.41E+00	WALL	0.0422	0.0000
16	0.000	8.000	0.000	0.000	2.3629	6.29E-01	WALL	0.0661	0.0000

DUMP NUMBER 1 HAS BEEN WRITTEN.

$

d 3) _ 27 MHz RESONANT CAVITY.

IN THIS CASE THE WAVELENGTH IS EQUAL TO 11.1 M. AND AN INNER RADIUS OF 6 cm IS ALMOST MANDATORY FOR A REASONABLE STIFFENES OF THE INNER ELECTRODE.

ACCORDINGLY WITH EQ (5) and (6) BOTH THE STORED ENERGY AND THE POWER WASTED SHOULD INCREASE.

THE SIZES COULD BE AS FOLLOWS:

$$\begin{cases} \ell = 2.50 \qquad GAP = 0.04 \qquad TK = 0.04 \\ R3 = 21 \\ R2 = 0.09 \\ R1 = 0.06 \end{cases}$$

ON PAGES 20 - 21 - 22 ARE SHOWN THE MOST SIGNIFICANT S.F. RESULTS.

```
XRUG HIGH Z0
 $REG NREG=1,DX=0.5,XMAX=250.,YMAX=22.,
 XREG1=8.0,YREG1=8.0,NPOINT=12$
 $PO X=0.0,Y=0.0$
 $PO X=10.0,Y=0.0$
 $PO X=10.0,Y=3.0$
 $PO X=5.,Y=3.0$
 $PO NT=2,X0=5.,Y0=4.0,R=1.0,THETA=-180.0$
 $PO X=4.,Y=7.0$
 $PO NT=2,X0=6.,Y0=7.,R=2.0,THETA=0.0$
 $PO X=8.0,Y=6.0$
 $PO X=250.0,Y=6.0$
 $PO X=250.0,Y=21.0$
 $PO X=0.0,Y=21.0$
 $PO X=0.0,Y=0.0$
$
```

28.083 MHz

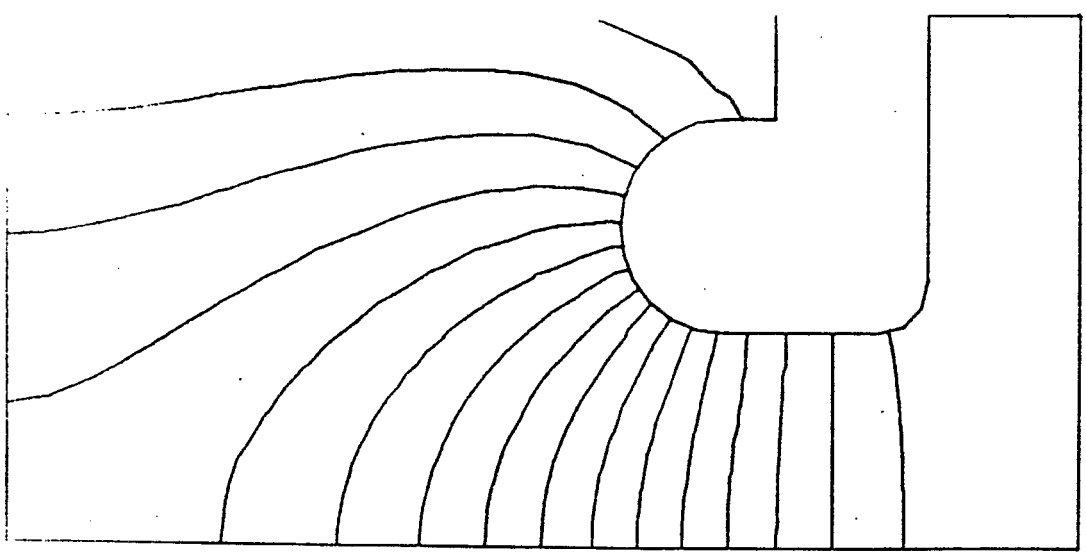

TAPE 73.DAT ; 1 F= 28.083 MHz

```
RUG HIGH 20
*2  2 *21  1 0 1 1 *9   1.0000
*36 16 *37  1 SKIP
   1   1   1   0  17   1
  17   1   1   0  19   1
  19   1   0   1  19   7
  19   7   0   1  17   8
  17   8  -1   0  11   8
  11   8  -1   0   9  10
   9  10   0   1   9  17
   9  17   0   1  17  17
  17  17   0  -1  17  14
  17  14   1   0 259  15
 259  15   0   1 259  19
 259  19   0   1 259  34
 259  34  -1   0  17  34
  17  34  -1   0   1  34
   1  34   0  -1   1  19
   1  19   0  -1   1   1
  1  1       0.0000       0.0000  0  1 REGION
   1   1     0.0000     0.0000
  17   1     8.0000     0.0000
  19   1    10.0000     0.0000
  19   7    10.0000     3.0000
  19   8     9.3333     3.0000
  17   8     8.0000     3.0000
  11   8     5.0000     3.0000
  10   8     4.5000     3.1340
   9   9     4.1340     3.5000
   9  10     4.0000     4.0000
   9  17     4.0000     7.0000
   9  18     4.0681     7.5176
   9  19     4.2679     8.0000
  10  19     4.5858     8.4142
  11  20     5.0000     8.7321
  12  20     5.4824     8.9319
  13  20     6.0000     9.0000
  14  20     6.5176     8.9319
  15  20     7.0000     8.7321
  16  20     7.4142     8.4142
  16  19     7.7321     8.0000
  17  18     7.9319     7.5176
  17  17     8.0000     7.0000
  17  14     8.0000     6.0000
 259  14   249.0037     6.0000
 259  15   250.0000     6.0000
 259  19   250.0000     8.0000
 259  34   250.0000    21.0000
  17  34     8.0000    21.0000
   1  34     0.0000    21.0000
   1  19     0.0000     8.0000
   1   1     0.0000     0.0000 COUN
 2  1  1.0  0.0  0  -1         REGION
 259  15  250.0      6.0      COUN
$
```

$

SUPERFISH OUTPUT SUMMARY 15:37:38 24-JAN-8

PROBLEM NAME =RUG HIGH Z0

CAVITY LENGTH = 20.000 CM CAVITY DIAMETER = 42.000 CM

D.T. GAP = 20.000 CM STEM RADIUS = 1.000 CM

FREQUENCY (STARTING VALUE = 27.000) = 28.033 MHZ

BETA = 0.0000 PROTON ENERGY = 0.000 MEV

NORMALIZATION FACTOR (E0=1 MV/M) ASCALE = 13519.4

STORED ENERGY (MESH PROBLEM ONLY) = 0.3069 JOULES

POWER DISSIPATION (MESH PROBLEM ONLY) = 5974.29 WATTS

T,TP,TPP,S,SP,SPP = 0.000 0.000 0.000 0.000 0.000 0.000

Q = 9048 SHUNT IMPEDANCE = 16.74 MOHM/M

PRODUCT Z*T**2 ZTT = 0.00 MOHM/M

MAGNETIC FIELD ON OUTER WALL = 1025 AMP/M

MAXIMUM ELECTRIC FIELD ON BOUNDARY = 4.179 MV/M

ISEG	ZBEG (CM)	RBEG (CM)	ZEND (CM)	REND (CM)	EMAX (MV/M)	POWER (W)		D-FREQ (DELZ)	D-FREQ (DELR)
3	10.000	0.000	10.000	3.000	0.0450	3.69E-07	WALL	0.0000	0.0000
4	10.000	3.000	8.000	3.000	0.0412	1.31E-06	WALL	0.0000	0.0000
5	8.000	3.000	5.000	3.000	0.7598	1.56E-04	WALL	0.0000	0.0002
6	5.000	3.000	4.000	4.000	3.2169	3.63E-03	WALL	0.0036	0.0022
7	4.000	4.000	4.000	7.000	3.2517	8.49E-02	WALL	0.0183	0.0000
8	4.000	7.000	8.000	7.000	4.1790	2.09E+00	WALL	0.0000	0.0444
9	8.000	7.000	8.000	6.000	0.7685	7.77E-01	WALL	0.0002	0.0000
10	8.000	6.000	250.000	6.000	1.3087	4.45E+03	WALL	0.0000	-0.0387
11	250.000	6.000	250.000	8.000	0.7104	5.77E+01	WALL	-0.0018	0.0000
12	250.000	8.000	250.000	21.000	0.3745	1.94E+02	WALL	-0.0078	0.0000
13	250.000	21.000	8.000	21.000	0.3823	1.27E+03	WALL	0.0000	-0.0100
14	8.000	21.000	0.000	21.000	0.3225	1.38E+00	WALL	0.0000	0.0009
15	0.000	21.000	0.000	8.000	1.8446	1.89E+00	WALL	0.0133	0.0000
16	0.000	8.000	0.000	0.000	2.3637	1.41E-01	WALL	0.0206	0.0000

DUMP NUMBER 1 HAS BEEN WRITTEN. ,
$

THE FREQUENCY IS EQUAL TO 28.033 MHz AND THE SHUNT IMPEDANCE IS EQUAL TO 0.836 MΩ. (AS EXPECTED).

THIS MEANS THAT FOR 200 KV WE NEED, AL LEAST, 23.9 KW AND ~ 32 KW should be SAFE.

IT SHOULD BE NOTED THAT INCREASING THE WAVELENGTH THE CUST OF THE CAVITY INCREASES MORE OR LESS LINEARLY WITH THE WAVELENGTH SINCE THE RADIU R_3 IS CONSTANT.

ON THE other Hand COULD be NOT CONVENIENT TO LOAD THE CAVITY with A LARGER CAPACITOR BECAUSE IN THIS CASE THE LENGTH DECREASES BUT THE FACTOR χ INCREASES LEADING TO A LARGER WASTE OF ENERGY.

NEVERTHELESS THE LONGITUDINAL SPACE OCCUPIED BY THE CAVITIES INCREASES WITH INCREASES WITH INCREASING THE WAVELENGTH WHICH MAY BE IMPORTANT.

E) - THE POWER AMPLIFIERS

SOME PRIVATE COMMUNICATIONS* SUGGEST THAT A SUITABLE POWER GENERATOR (25 ÷ 55 MHz; 10% BW, REASONABLE LINEARITY IN AMPLITUDE AND PHASE, 1 VOLT PEAK DRIVING VOLTAGE ON 50 Ω; 50 Ω COAX OUTPUT) WOULD COST ABOUT 4.5 $ PER WATT. ASSUMING AN OVER ALL EFFICIENCY ~ 50% THE GENERATOR FOR THE FIRST OPTION WOULD COST about 0.9 M$. (THAT CORRESPONDS TO 5 AMPLIFIERS EACH CONNECTED WITH A SINGLE CAVITY; GROUNDED GRID EIMACTUBE 4CX 3500)

FOR THE THIRD OPTION (27 MHz) THE COST OF THE GENERATOR SHOULD BE CLOSE TO 1.4 M$.

IT IS IMPORTANT TO RECOGNISE THAT A CAREFULL ANALYSIS OF THE BEAM LOADING COULD DEMAND AN INCREASE OF THE INSTALLED POWER which WOULD INCREASE THE AMPLIFIER COST.

---

* CONTINENTAL ELECTRONICS
P.O. BOX 270879 DALLAS 75227
ROSS FAULKNER (214) 3817161.

F)- FREQUENCY MODULATION.

THE FREQUENCY CHANGES BY ABOUT 5E-3, OF WHICH THE LARGER PART OCCURS IN THE FIRST FEW SECONDS.

THIS SUGGEST THAT A MECHANICAL SOLUTION SHOULD BE FEASIBLE.

A MOVING DIAPHRAGH PLACED IN FRONT OF THE CAVITY DISC WOULD DO THE JOB. A DISPLACEMENT ABOUT 2 mm. OF THE WALL IN FRONT OF THE INTERNAL DISC IS ENOUGH

IF THE CAPACITIVE LOADING IS INCREASED (which MEANS USING A SHORTER CAVITY) THIS MOTION COULD BE REDUCED. AN OLEODYNAMIC SERVO SYSTEM (ACCURATE TO ABOUT 10^{-2}) IS ENOUGH AND A VERY SIMPLE SLOW FEEDBACK PHASE LOOP WOULD COMPENSATE FOR ERRORS OF THE SERVO.

G) - SOME BEAM LOADING CONSIDERATIONS..

THE TOTAL CHARGE PER BUNCH IS EQUAL TO 1.39 E-8 COULOMB (FOR GOLD)

THE CAVITY GAP CAPACITANCE IN OPTION ONE IS VERY NEAR TO ~ 9.8 E-12 F. (S.F.) THIS MEANS THAT FOR A δ SHAPED BUNCH THE INDUCED VOLTAGE WOULD BE $V_\delta = 1.418$ kV. THAIS A VERY REASONABLE VALUE. THE BEAM HARMONICS ARE EQUAL: $|I_n| = 0.123$ A.

WITH ONE MΩ CAVITY SHUNT IMPEDANCE THE INDUCED VOLTAGE IS NEARLY ABOUT 100 kV WHICH IS HALF OF THE VOLTAGE DUE TO THE AMPLIFIER. (THE BEAM LOADING IS TO BE CONSIDERED).

IT SHOULD BE VERY IMPORTANT TO TRY TO DESIGN A RELATIVELY LOW OUTPUT IMPEDANCE AMPLIFIER IN ORDER TO REDUCE THE BEAM INDUCED VOLTAGE AND TO RENDER THE CAVITY VOLTAGE CONTROL MORE EASY

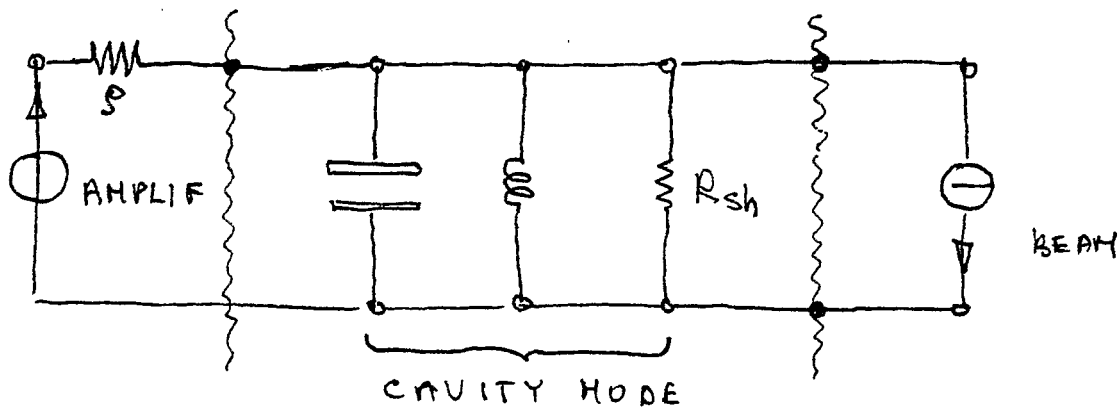

FROM THE ABOVE FIGURE IT IS EVIDENT THAT, AT RESONANCE, THE AMPLIFIER SEES THE VERY HIGH CAVITY SHUNT IMPEDANCE WHILE THE BEAM SEES THE CAVITY SHUNT IMPEDANCE IN PARALLEL WITH THE AMPLIFIER'S EQUIVALENT OUTPUT IMPEDANCE. A TRIODE WOULD BE MORE ADVISABLE THAN A TETRODE FOR THE FINAL AMPLIFIER.

H) – ALTERNATIVE PROPOSAL

GENERAL STATEMENT: THE CAVITIES CAN BE MADE IN AIR –

FOR EACH GAP A TOTAL VOLTAGE OF 20 KV IS STILL POSSIBLE. THEN WE NEED 50 CAVITIES –. THE LENGTH OF EACH CAVITY CAN BE REDUCED TO 0.75 m AND THE TOTAL AZIMUTHAL LENGTH CAN BE REDUCED TO 37 ÷ 40 METER. (50 MHz OPTION) –

THE χ FACTOR BECOMES EQUAL TO 1.63 AND THE TOTAL SHUNT IMPEDANCE PER CAVITY COULD BE IN THE RANGE OF ~ 0.8 MΩ. THE TOTAL POWER REQUESTED SHOULD be AROUND ~ 400 Watts. FOR 50 CAVITIES W_T = ~ 20 KW. THE INSTALLED POWER FOR THE RF SYSTEM SHOULD BE EQUAL TO 50 KW. We NOTE THAT with THIS SYSTEM EACH CAVITY COULD BE HEAVILY LOADED BY ITS OWN TRIODE SITTING ON THE CAVITY. THE TOTAL IMPEDANCE OFFERED TO THE BEAM

COULD BE GREATLY REDUCED WITH A SIGNIFICANT SIMPLIFICATION OF THE BEAM LOADING PROBLEM.

The 25 MHz OPTION CAN BE ALSO CONSIDERED.

IN THE LIMITING CASE OF A CAVITY 80 cm LONG! THE SF CALCULATIONS INDICATE THAT A POWER OF ~700 WATT IS REQUIRED FOR 20 kV AT THE GAP. THE INSTALLED POWER FOR THE RF SYSTEM SHOULD BE CLOSE TO 80 KW.

Obviously A CAVITY MORE LONG DEMANDS FOR LESS POWER.

REMARKS

- EACH CAVITY IS VERY CHEAP.
- NO MULTIPACTOR AND CONDITIONING PROBLEMS.
- THE SAL GIORDANO TECNIQUE FOR MODE SUPPRESSION. EASILY APPLICABLE
- REDUCTION OF THE RF GENERATOR COST.
- MINIMIZATION OF THE BEAM LOADIN PROBLEM.

ACKNOWLEDGEMENTS

THE AUTHOR IS HAPPY TO THANK J. CLAUS FOR READING AND CORRECTING THE MANUSCRIPT.