BNL-105775-2014-TECH

EP&S No. 62;BNL-105775-2014-IR

MESB Design Notes: II. Mass slit operation and pion contamination

C. T. Murphy

April 1973

Collider Accelerator Department

Brookhaven National Laboratory

U.S. Department of Energy

USDOE Office of Science (SC)

Notice: This technical note has been authored by employees of Brookhaven Science Associates, LLC under Contract No.AT(30-1)-16 with the U.S. Department of Energy. The publisher by accepting the technical note for publication acknowledges that the United States Government retains a non-exclusive, paid-up, irrevocable, world-wide license to publish or reproduce the published form of this technical note, or allow others to do so, for United States Government purposes.

DISCLAIMER

This report was prepared as an account of work sponsored by an agency of the United States Government. Neither the United States Government nor any agency thereof, nor any of their employees, nor any of their contractors, subcontractors, or their employees, makes any warranty, express or implied, or assumes any legal liability or responsibility for the accuracy, completeness, or any third party's use or the results of such use of any information, apparatus, product, or process disclosed, or represents that its use would not infringe privately owned rights. Reference herein to any specific commercial product, process, or service by trade name, trademark, manufacturer, or otherwise, does not necessarily constitute or imply its endorsement, recommendation, or favoring by the United States Government or any agency thereof or its contractors or subcontractors. The views and opinions of authors expressed herein do not necessarily state or reflect those of the United States Government or any agency thereof.

BROOKHAVEN NATIOANL LABORATORY
Associated Universities, Inc.
Upton, New York

EP&S DIVISION TECHNICAL NOTE

No. 62

C. T. Murphy
April 30, 1973

MESB Design Notes: II. Mass Slit Operation and Pion Contamination

A mass slit for MESB is being built which is, basically, 40" of ½" heavimet backed by 36" of 1½" brass. The heavimet pieces are split into 20" sections so as to permit sloping of the plates from the center of the mass slit; the slope should usually be 0.6 mrad. See page 4 (note by D. O'Brien) and Fig. 7 for mechanical details.

The above dimensions were arrived at by John Fox and myself, as the best compromise between the demands of various modes of the beam. The mass slit is designed to mask the highly aberrated pion image, with some loss of K's in a manner described below. The worst conditions were assumed, namely, that the B target is 4" long, that the beam is operating in that momentum range (4-6 GeV/c K's, or 6-9 $\bar{p}$'s) in which the mode is chosen such that the separation of images is only twice the geometrical image width ($\eta = 2$), and the full momentum bite is being used. Experimenters running the beam at much lower momenta, or trying to push the beam to very high momenta, or who can use a shorter production target, or who use a smaller momentum bite, may wish to reconsider the mass slit length and slope, and should perform the Monte Carlo studies described below under their particular conditions.

The remainder of this note describes the theory of the mass slit and applies it to modes 1, 3, and 4 of the beam. Lower limits are calculated for the number of pions which leak through. These numbers are lower limits because only the effects of chromatic aberrations and finite target length and breadth have been considered; magnet aberrations, separator non-uniformity and instability, and multiple scattering in windows, residual gas and collimator surfaces have not been considered.

Mass slit projections on vertical phase space at the mass slit.

It is easy to demonstrate that a mass slit whose dimensions in the vertical section, are:

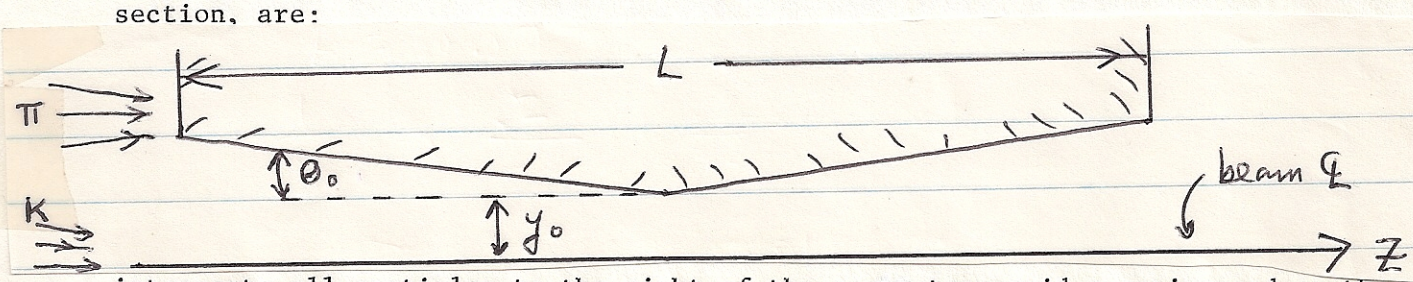

intercepts all particles to the right of the open trapezoid superimposed on the phase space plot (y, y') of the beam at the center of the mass slit, shown below:

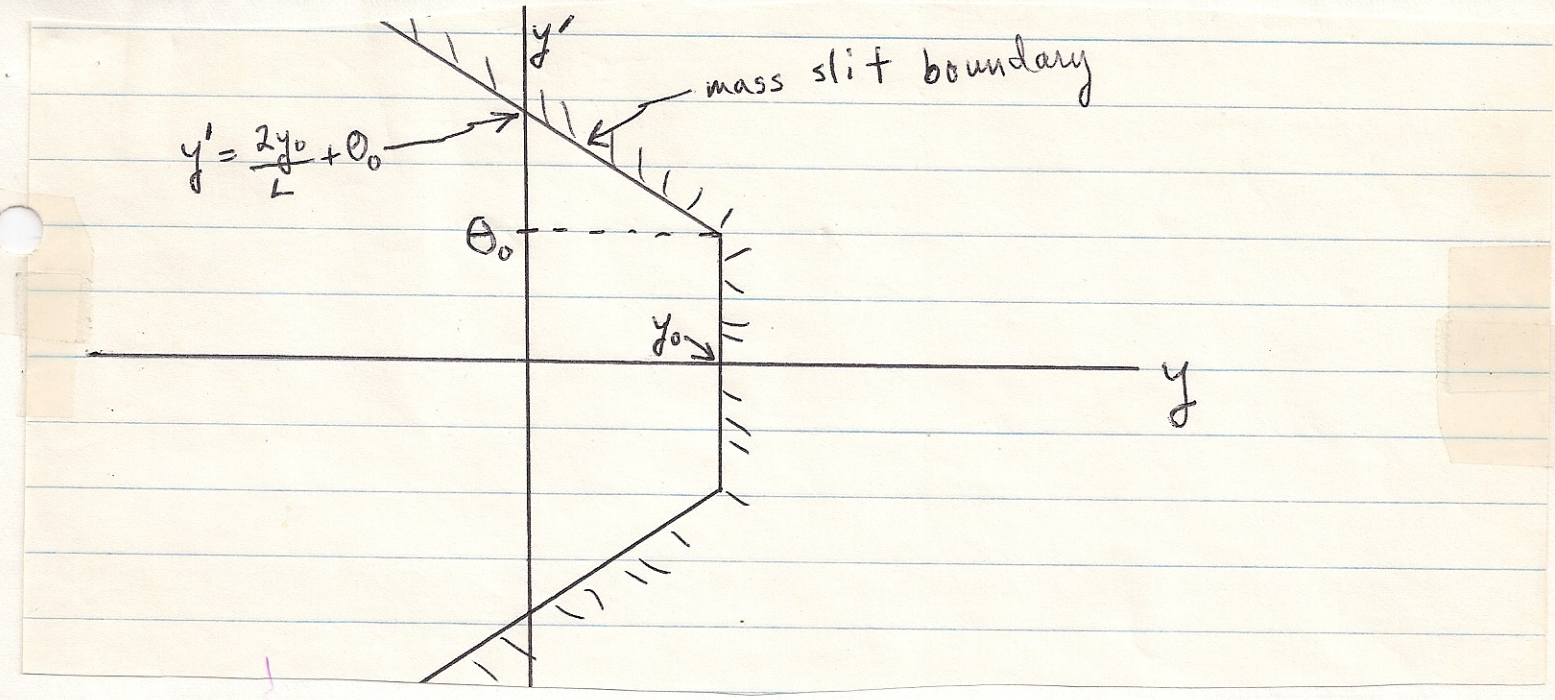

In the two figures, y_0 is the offset of the center of the mass slit from the beam (kaon) centerline and θ_0 is the slope of the mass slit. The trapezoid of the second figure bears a strong resemblance to the "bow tie" shape of the aberrated pion image shown in Fig. 13-16 of EP&S 72-1 (Characteristics of MESB), and can be matched to the pion image by a suitable choice of L, y_0, and θ_0. To understand the relationship between the two figures, note that a particle which would arrive at the center of the mass slit ($y = 0$) at a slope of $y'=2y_0/L + \theta_0$ in the second figure would scrape the mass slit at the left hand edge of the first figure. Thus, it is marginally "intercepted" by the mass slit. The question of how many pions are thus intercepted by too little material to remove them from the beam is considered in the calculations leading to Table I. In the two figures, the lower half of the mass slit has been ignored, since it is there only to degrade muons.

Application to MESB

Figs. 1-5 show Monte Carlo phase space distributions, under conditions described in the second paragraph of page 1, and Table I, for several modes of MESB, for both K's and pions, with the mass slit trapezoid superimposed. The offset of the mass slit, y_0, was always chosen to be 1½ times the geometrical image half width (i.e., the width at $y' = 0$), except in mode 4, where I choose $y_0 = 1.25$ x geometrical half width or 1.0 x geometrical image half width (Fig. 5). The separator field is assumed to be 225 kV/inch (90 kV/cm); the momenta assumed are 4 GeV/c for mode 1, 6 GeV/c for mode 3, and 6.6 GeV/c for mode 4. (The scale of the y axis varies from figure to figure, since the program automatically puts the center of the pion image 8 bins off the centerline.) In most cases the K and pion images actually overlap at large values of y'.

Table I summarizes the quantitative results gleaned from the Monte Carlo plots. The first column lists y_0, the assumed offset of the center of the mass slit from the beam centerline. The second column gives the fraction of K's which hit the mass slit; no correction is made for those which pass through very little material in the mass slit. The third column lists the fraction of the pions which completely miss the mass slit (all pions to the left of the trapezoid in Figs. 1-5). Column 4 adds in an estimate of the fraction of the pions which "punch through" (Roy Kerth's phrase) the material of the mass slit, explained below.

Column 6 gives the estimate of the pi/K ratio immediately following the slit, based on the pi/K ratios in front of the slit from Fig. 12, EP&S 72-1 at the momentum shown in column 5, the leak-through rate of column 4, and the K attenuation of column 2. The last column gives the estimate of the pi/K ratio at either MPS or the Carleton experiment in the East leg, by simply folding in a further decay loss. I reiterate that these are lower limits (see p. 1.)

Mass slit effectiveness; punch through estimate

The following are the properties of heavimet:

interaction length (omitting diffraction scattering):	4"
radiation length	0.2"
dE/dx minimum	50 MeV/inch

Most pions traverse 40" of heavimet, or 10 interaction lengths, which leaves a negligible pion contamination. Those which pass through the mass slit at the edge of the trapezoid of Figs. 1-5 pass through considerably less material. Fig. 6 is a scatterplot of the length of material through which particles pass as a function of y and y' for mode 3E; the scale is the same as in Fig. 4. Multiplying the number of particles in each bin by the interaction probability leads to a punch-through rate of 0.6% for mode 3E.

In most modes, the number of pions which punch through is somewhat smaller than the number which entirely miss the mass slit. Furthermore, pions which punch through, say, 4" of heavimet undergo multiple scattering of 13 mrad (rms), which is much greater than the maximum vertical angle of the wanted particles (2.3 mrad), so some of these particles will be stopped in the backup slit or in the pole pieces of D4. (These same particles lose a couple of hundred MeV/c in momentum in the mass slit, but this is not enough for them to be swept out of the beam by the downstream bending magnets.)

Mass slit: Mechanics (by D. O'Brien)

A schematic drawing of the mass slit is shown in Fig. 7. The blueprint of the mass slit is presently in the possession of the author. The flat top and bottom pieces of the mass slit are 1½ x 36" x 8" brass plates. There are four movable heavimet plates of dimensions ½" x 20" x 8" each. At the center 0.006" shims made of brass are available for varying the mass slit aperture. The upper half of the mass slit can be moved up or down relative to the lower half via screws mounted at the four corners of the structure. There is a screw at point A that permits the lowering and raising of (and also serves to hold up) the two upper heavimet plates for the insertion and removal of shims. The lower heavimet plates cannot be operated on in this manner and must be raised with screwdrivers via slots in the lower brass plate as seen in Fig. 7. The entire structure will sit on a table and, as a unit, it can be raised or lowered relative to the table by rotating its threaded legs.

Table I- Predicted lower limits on the pion contaminations for 5 modes of MESB, based on the Monte Carlo plots of Figs. 1-5. The mometum bite listed in the last column is determined by the momentum collimator aperture, and is not a sharp bite, having tails which extend another ± 1%. Other constant conditions of the Monte Carlo runs are: target size = 0.040" x 0.060" x 4"; production angle = 6°; horizontal acceptance at target = ± 20 mrad; vertical acceptance so as to fill the 2" gap of the separators.

Mode	y_o inches	% k which hit mass slit	% pi which survive Miss	Miss + punch-through	P GeV/c	pi/K after mass	pi/K at exp't	Δ P/P %
MPS 1	.070	7.6	0.47	0.60	4.0	0.62	1.3	3.0
E 1	.066	7.2	0.12	0.15	4.0	0.15	0.26	3.0
MPS 3	.018	22.5	0.23	0.43	6.0	0.28	0.46	2.5
E 3	.018	25.6	1.2	1.8	6.0	1.20	1.80	2.5
MPS 4	.025	11.2	1.0	1.0	6.6	0.55	0.90	1.5
MPS 4*	.020	21.0	0.14	0.24	6.6	0.14	0.23	1.5

* Corresponds to dotted lines on Fig. 4: θ_o = 0.3 mrad, y_o = 1.0 x image half-width.

Distribution - Bl Limited

1120 K's

y' = 2.32 mr

0	0	0	0	0	0	0	0	0	0	0	0	0	0	0	0	0	0	0
0	0	0	0	0	0	0	0	0	0	0	1	1	0	0	0	0	0	2
0	0	0	0	0	0	0	1	3	4	0	3	0	0	0	0	0	0	11
0	0	0	0	1	6	2	6	2	9	1	1	0	0	0	0	0	0	28
0	0	2	2	5	10	8	10	7	4	2	0	0	1	0	1	0	0	51
1	1	1	7	9	10	13	21	11	6	3	2	2	2	1	0	0	0	90
1	1	1	8	9	8	13	19	14	10	7	2	3	0	0	1	0	1	98
0	0	0	3	9	12	14	22	17	12	4	5	1	0	0	1	0	0	100
0	0	0	2	12	6	14	22	24	9	5	0	0	0	0	0	0	0	94
0	0	0	0	0	7	15	30	14	16	7	1	0	0	0	0	0	0	90
0	0	0	0	0	6	19	13	29	14	10	2	0	0	0	0	0	0	93
0	0	0	0	2	7	13	26	15	20	10	3	1	0	0	0	0	0	97
0	0	1	1	2	9	4	19	18	18	3	2	6	1	0	0	0	0	84
0	0	1	1	1	7	9	18	26	18	18	6	3	1	0	0	0	0	109
0	1	0	1	1	6	8	14	7	10	9	3	4	3	0	0	0	0	68
0	0	0	0	1	3	9	8	5	8	8	5	0	1	0	0	0	0	50
0	0	0	0	0	1	4	7	4	1	6	2	0	0	0	0	0	0	25
0	0	0	0	2	2	2	0	3	1	0	0	0	0	0	0	0	0	10
0	0	0	0	3	0	0	0	0	0	0	0	0	0	0	0	0	0	3
0	0	0	0	0	0	0	0	0	0	0	0	0	0	0	0	0	0	0
2	3	6	25	57	100	147	236	199	160	93	38	21	9	1	3	0	1	Projection

mass slit

y' = .234"

K

Mode MPS 1

π

y' = 2.32 mr

mass slit; 2800 π's

0	0	0	0	0	0	0	0	0	0	0	0	0	0	3	10	5	2	20
0	0	0	0	0	0	0	0	0	0	0	0	9	9	11	14	0	4	47
0	0	0	0	0	0	0	0	0	0	2	8	9	16	20	15	8	4	82
0	0	0	0	0	0	0	0	0	1	1	13	12	27	22	28	26	17	147
0	0	0	0	0	0	0	0	0	0	3	9	18	30	37	48	27	11	183
0	0	0	0	0	0	0	0	0	0	1	3	18	28	35	37	29	23	174
0	0	0	0	0	0	0	0	0	0	0	0	4	29	44	51	37	22	187
0	0	0	0	0	0	0	0	0	0	0	0	1	23	41	44	35	31	175
0	0	0	0	0	0	0	0	0	0	0	0	0	13	30	52	37	41	173
0	0	0	0	0	0	0	0	0	0	0	0	3	12	18	50	48	37	168
0	0	0	0	0	0	0	0	0	0	0	0	2	8	21	34	41	30	136
0	0	0	0	0	0	0	0	0	0	1	0	3	14	15	24	30	40	127
0	0	0	0	0	0	0	0	0	1	1	4	4	16	17	22	34	27	126
0	0	0	0	0	1	0	0	0	0	3	1	4	6	14	13	13	30	85
0	0	0	0	0	0	0	0	0	0	1	0	7	10	17	11	20	19	85
0	0	0	0	0	0	0	0	0	0	2	4	4	10	14	5	3	0	42
0	0	0	0	0	0	0	0	0	0	2	4	6	1	0	0	0	0	13
0	0	0	0	0	0	0	0	0	1	0	0	0	0	0	0	0	0	1
0	0	0	0	0	0	0	1	0	0	0	0	0	0	0	0	0	0	1
0	0	0	0	0	0	0	0	0	0	0	0	0	0	0	0	0	0	0
0	0	0	0	0	1	0	1	0	3	17	46	104	252	359	458	393	338	Projections

y' = .234"

Fig. 1 – Phase space scatterplots of K's and π's at the mass slit for Mode MPS 1, from Monte Carlo runs. The mass slit intercepts all particles to the right of the open trapezoid.

y' = 2.10mr

1020 K's

0	0	0	0	0	0	0	0	0	0	0	0	1	0	0	0	0	0	0	1
0	0	0	0	0	0	0	0	0	4	1	2	5	0	0	0	0	0	0	12
0	0	0	0	0	0	4	3	6	5	2	4	2	0	0	0	0	0	0	26
0	0	0	1	0	4	2	7	11	9	8	5	1	1	0	0	0	1	0	50
0	0	0	1	1	3	12	11	9	14	15	6	2	2	1	0	0	0	0	77
0	0	0	0	3	4	6	4	10	13	10	6	5	3	1	0	0	0	0	65
0	0	0	0	1	7	11	9	3	13	18	3	3	4	0	0	0	0	0	72
0	0	0	0	0	2	13	15	18	16	11	6	0	1	0	0	0	0	0	82
0	0	0	0	0	0	2	8	19	19	10	2	1	0	0	0	0	0	0	61
0	0	0	0	0	0	3	17	24	17	10	7	0	0	0	0	0	0	0	78
0	0	0	0	0	0	2	18	12	17	13	6	0	0	0	0	0	0	0	68
0	0	0	0	0	1	6	12	23	16	16	5	0	0	0	0	0	0	0	79
0	0	0	0	1	2	1	12	10	18	13	0	2	0	0	0	0	0	0	59
0	0	0	0	2	4	5	13	13	17	8	9	5	0	0	0	0	0	0	76
0	1	0	2	2	1	7	12	9	12	10	2	2	0	0	0	0	0	0	60
0	0	0	2	2	9	6	12	10	10	8	6	2	3	0	0	0	0	0	70
0	0	0	1	1	3	7	7	7	6	7	6	1	0	0	0	0	0	0	46
0	0	0	0	0	1	5	4	4	7	8	0	0	0	0	0	0	0	0	29
0	0	0	0	1	4	0	0	2	0	0	0	0	0	0	0	0	0	0	7
0	0	0	0	0	0	0	0	0	0	0	0	0	0	0	0	0	0	0	0
0	1	0	7	14	45	92	164	190	213	168	75	32	14	2	0	0	1	0	

y' = .226'

Mode E1

y' = 2.10

2500 π's

0	0	0	0	0	0	0	0	0	0	0	2	4	10	14	17	4			51
0	0	0	0	0	0	0	0	0	2	6	12	10	18	17	15	11			91
0	0	0	0	0	0	0	0	0	1	4	7	18	15	23	18	16			102
0	0	0	0	0	0	0	0	0	0	2	11	13	32	30	33	27			148
0	0	0	0	0	0	0	0	0	0	2	11	18	24	27	29	21			132
0	0	0	0	0	0	0	0	0	0	0	4	15	26	37	33	29			144
0	0	0	0	0	0	0	0	0	0	0	2	13	39	38	41	24			157
0	0	0	0	0	0	0	0	0	0	0	0	8	32	34	40	27			141
0	0	0	0	0	0	0	0	0	0	0	0	7	28	43	44	22			144
0	0	0	0	0	0	0	0	0	0	0	0	7	26	44	39	32			148
0	0	0	0	0	0	0	0	0	0	0	0	9	32	36	31	27			135
0	0	0	0	0	0	0	0	0	0	0	1	11	20	29	34	30			125
0	0	0	0	0	0	0	0	0	1	3	4	17	27	30	41	30			153
0	0	0	0	0	0	0	0	0	0	2	9	14	24	21	36	21			127
0	0	0	0	0	0	0	0	0	0	2	8	19	22	22	19	20			112
0	0	0	0	0	0	0	0	0	1	3	14	13	18	15	15	4			83
0	0	0	0	0	0	0	0	0	1	5	8	5	1	0	0	0			20
0	0	0	0	0	0	0	0	0	0	0	0	0	0	0	0	0			0
0	0	0	0	0	0	0	0	0	0	0	0	0	0	0	0	0			0
0	0	0	0	0	0	0	0	0	0	0	0	0	0	0	0	0			0
0	0	0	0	0	0	0	0	0	6	29	93	201	394	460	485	345			

y' = .226

Fig. 2 – Mode E1
(see Fig. 1 caption)

y'=2.33mr — y'

3450 K's (780 hit mass)

0	0	0	0	0	0	0	0	0	0	0	0	0	0	0	0	0	0	0	0
0	0	0	0	0	0	0	0	0	0	0	0	1	1	1	3	1	0	0	7
1	1	7	8	9	13	12	9	15	18	16	15	12	8	7	5	3	0	1	160
1	0	14	14	13	19	17	16	20	20	17	20	16	19	7	4	1	0	0	218
2	3	7	7	12	22	20	19	20	17	15	14	14	7	11	3	0	0	0	193
0	0	5	12	13	14	26	33	27	24	22	25	16	10	2	0	0	0	0	229
0	0	0	1	6	13	34	37	34	43	25	14	13	1	0	1	0	0	0	222
0	0	0	0	4	10	17	43	48	36	36	25	10	0	0	0	0	0	0	229
0	0	0	0	0	4	24	35	53	52	43	16	0	0	0	0	0	0	0	227
0	0	0	0	0	0	8	63	60	60	58	7	0	0	0	0	0	0	0	256
0	0	0	0	0	0	5	50	44	56	49	7	0	0	0	0	0	0	0	211
0	0	0	0	0	2	11	44	52	50	45	17	6	0	0	0	0	0	0	227
0	0	0	0	0	7	26	31	50	70	36	21	11	3	0	0	0	0	0	255
0	0	0	1	4	6	19	24	35	31	26	24	17	9	1	0	0	0	0	197
0	0	1	7	9	17	21	31	26	31	26	26	19	9	6	1	1	0	0	231
0	0	2	6	6	15	22	21	26	24	30	22	20	18	7	5	1	0	0	225
1	1	2	6	14	11	21	17	28	16	17	17	16	11	15	12	4	4	1	214
0	6	6	9	9	9	8	12	11	15	13	6	9	4	7	2	2	1	1	131
1	2	0	3	1	0	0	1	2	0	0	0	0	0	0	0	0	0	0	10
0	0	0	0	0	0	0	0	0	0	0	0	0	0	0	0	0	0	0	0
6	13	44	74	100	162	291	486	551	563	474	276	180	100	64	36	13	5	3	

y' = .062"

Mode MPS 3

y'=2.33 mr

3440 π's

0	0	0	0	0	0	0	0	0	0	0	0	0	0	0	0	0	0	0	0
0	0	0	0	0	0	0	0	0	0	1	1	1	2	2	3	2	1		13
0	0	0	0	0	0	0	1	1	6	8	15	14	17	18	11	20	21		132
0	0	0	0	0	0	1	1	0	7	16	15	14	18	15	19	26	14		146
0	0	0	0	0	0	0	0	2	7	10	12	13	26	13	24	16	17		140
0	0	0	0	0	0	0	0	0	0	10	9	19	24	35	40	21	27		185
0	0	0	0	0	0	0	0	0	0	0	2	8	28	33	37	43	34		185
0	0	0	0	0	0	0	0	0	0	0	1	7	16	34	51	44	32		185
0	0	0	0	0	0	0	0	0	0	0	0	0	17	44	47	50	52		210
0	0	0	0	0	0	0	0	0	0	0	0	0	5	50	65	46	65		231
0	0	0	0	0	0	0	0	0	0	0	0	0	2	40	41	54	46		183
0	0	0	0	0	0	0	0	0	0	0	0	1	14	36	48	54	44		197
0	0	0	0	0	0	0	0	0	0	0	1	8	17	27	56	53	41		203
0	0	0	0	0	0	0	0	0	0	4	4	10	20	24	26	29	25		142
0	0	0	0	0	0	0	0	0	1	5	7	17	18	28	24	31	29		160
0	0	0	0	0	0	0	0	0	2	4	11	9	19	28	20	21	28		142
0	0	0	0	0	0	0	1	1	2	7	12	15	12	21	23	17	17		128
0	0	0	0	0	0	1	1	5	6	5	12	4	5	7	10	13	4		73
0	0	0	0	0	0	0	0	0	0	0	0	0	0	0	0	0	0		0
0	0	0	0	0	0	0	0	0	0	0	0	0	0	0	0	0	0		0
0	0	0	0	0	0	2	4	9	31	70	102	140	260	455	545	540	497		

y' = .062"

Fig. 3 — Mode MPS 3
(see fig. 1 caption)

y' = 2.36 mr

1400 K's (358 hit maxes)

0	0	0	0	0	0	0	0	0	0	0	0	0	0	1	1	1	1	4
0	0	0	0	0	0	0	0	0	0	2	5	5	2	3	4	0	0	21
0	0	0	2	2	3	5	9	7	7	8	9	4	3	5	1	3	0	68
2	4	6	4	7	3	8	3	5	13	5	13	6	3	3	2	2	1	91
2	2	5	7	7	8	8	7	5	6	13	12	9	3	0	1	0	0	96
0	1	3	11	3	8	12	10	12	9	10	6	4	3	1	0	0	0	93
0	2	2	12	10	4	8	8	10	11	8	6	2	0	1	0	0	0	84
0	0	3	5	4	6	10	16	18	9	12	5	0	0	0	0	0	0	88
0	0	0	0	4	4	10	19	18	10	8	1	0	0	0	0	0	0	74
0	0	0	0	0	5	15	31	17	16	7	0	0	0	0	0	0	0	91
0	0	0	0	0	1	21	19	28	18	13	0	0	0	0	0	0	0	100
0	0	0	0	1	6	13	29	27	9	11	1	0	0	0	0	0	0	97
0	0	0	0	3	9	13	15	11	11	11	1	3	0	0	0	0	0	77
0	0	0	1	3	5	11	17	12	16	8	11	1	2	0	0	0	0	87
0	0	1	4	9	11	7	8	11	14	3	5	4	2	5	0	0	0	84
0	2	5	7	9	7	4	8	5	7	6	3	5	2	0	3	1	1	75
1	7	3	5	7	5	6	7	7	7	4	4	12	3	1	0	0	0	79
2	3	4	8	4	6	8	6	6	2	0	3	0	1	0	0	0	0	53
3	2	1	5	3	0	3	0	0	0	0	0	0	0	0	0	0	0	19
2	0	0	0	0	0	0	0	0	0	0	0	0	0	0	0	0	0	4
12	23	33	71	76	91	162	212	199	165	129	85	55	24	20	12	7	3	

y = .061

Mode E 3

y' = 2.36 mr

3550 π's

0	0	0	0	0	0	0	0	0	0	0	0	0	0	0	0	0	1	1
0	0	0	0	0	0	0	0	1	1	2	6	10	7	9	16	13	18	83
0	0	0	0	0	0	0	1	8	8	15	6	19	16	15	11	19	29	147
0	0	0	0	0	0	1	5	4	6	8	18	19	15	15	14	18	20	143
0	0	0	0	0	0	0	1	2	3	6	16	17	24	22	23	23	27	164
0	0	0	0	0	0	0	0	0	4	6	13	21	20	18	28	18	31	159
0	0	0	0	0	0	0	0	0	0	2	8	17	19	35	38	52	37	208
0	0	0	0	0	0	0	0	0	0	0	0	5	21	35	54	58	42	215
0	0	0	0	0	0	0	0	0	0	0	0	1	7	45	67	43	36	199
0	0	0	0	0	0	0	0	0	0	0	0	0	9	42	58	63	51	223
0	0	0	0	0	0	0	0	0	0	0	0	1	21	28	52	47	30	179
0	0	0	0	0	0	0	0	0	0	0	0	12	25	35	33	36	24	165
0	0	0	0	0	0	0	0	0	0	2	1	10	26	22	30	28	31	150
0	0	0	0	0	0	0	0	0	1	2	13	15	26	24	18	23	23	145
0	0	0	0	0	0	0	0	2	7	7	13	27	16	15	10	19	15	131
0	0	0	0	0	0	1	1	3	11	16	13	21	11	20	12	12	19	140
0	0	0	0	0	0	1	2	4	14	11	18	15	13	17	12	11	14	132
0	0	0	0	0	1	3	8	7	9	11	9	8	1	3	0	0	0	60
0	0	0	1	1	3	1	1	1	0	0	0	0	0	0	0	0	0	8
0	0	0	0	0	0	0	0	0	0	0	0	0	0	0	0	0	0	0
0	0	0	1	1	4	7	19	32	64	88	134	218	277	400	476	483	448	

y = .061

Fig. 4 - Mode E 3

(see Fig. 1 caption)

y' = 1.44 mr 2700 K's

1.15 mr

0	0	0	0	0	0	0	0	0	0	0	0	0	0	0	0	0	0	0
0	0	0	0	0	0	0	0	3	2	1	3	2	0	0	0	0	0	11
0	0	5	5	15	18	20	28	28	21	14	8	5	5	0	0	0	0	144
0	0	0	2	14	18	15	35	19	27	21	12	7	0	0	0	0	0	170
0	0	2	1	12	15	17	28	29	16	11	12	5	0	0	0	0	0	148
0	0	0	3	11	15	26	40	36	23	19	10	1	0	0	0	0	0	184
0	0	0	0	2	10	38	29	42	27	11	1	1	0	0	0	0	0	161
0	0	0	0	3	8	29	41	41	31	15	2	0	0	0	0	0	0	170
0	0	0	0	0	8	28	42	42	36	11	0	0	0	0	0	0	0	167
0	0	0	0	0	3	52	47	40	51	4	0	0	0	0	0	0	0	197
0	0	0	0	0	4	42	32	46	33	1	0	0	0	0	0	0	0	158
0	0	0	0	0	6	36	44	44	37	10	0	0	0	0	0	0	0	177
0	0	0	0	0	12	33	49	55	25	7	3	0	0	0	0	0	0	184
0	0	0	0	3	11	24	40	43	24	15	5	0	0	0	0	0	0	165
0	0	0	3	14	18	19	31	36	24	21	4	0	0	0	0	0	0	170
0	0	0	4	6	15	25	26	34	27	22	9	3	0	0	0	0	0	171
0	0	0	3	15	11	28	33	17	19	17	16	8	2	0	0	0	0	169
0	1	0	9	6	13	18	21	17	13	5	6	4	0	0	0	0	0	113
0	1	1	3	0	1	1	4	1	0	0	0	0	0	0	0	0	0	12
0	0	0	0	0	0	0	0	0	0	0	0	0	0	0	0	0	0	0
0	2	3	33	91	183	449	562	573	436	205	91	36	7	0	0	0	0	

y = 0.05"

y = 0.10"

Mode MPS 4

y' = 1.44 mr 2700 π's

1.15 mr

0	0	0	0	0	0	0	0	0	0	0	0	0	0	0	0	0	0	0
0	0	0	0	0	0	0	0	0	1	3	5	5	4	11	6	3	6	44
0	0	0	0	0	0	0	0	0	4	9	23	19	22	27	23	19	7	153
0	0	0	0	0	0	0	0	2	1	15	10	16	26	27	27	21	14	159
0	0	0	0	0	0	0	0	0	3	8	18	19	33	28	11	15	10	145
0	0	0	0	0	0	0	0	0	0	8	14	28	40	43	24	22	8	187
0	0	0	0	0	0	0	0	0	0	1	9	27	37	42	29	11	2	158
0	0	0	0	0	0	0	0	0	0	0	11	27	38	40	37	15	2	170
0	0	0	0	0	0	0	0	0	0	0	6	36	37	44	36	15	0	174
0	0	0	0	0	0	0	0	0	0	0	3	48	39	34	46	9	0	179
0	0	0	0	0	0	0	0	0	0	0	2	40	35	56	33	5	0	171
0	0	0	0	0	0	0	0	0	0	0	7	29	42	42	41	9	0	163
0	0	0	0	0	0	0	0	0	0	1	10	29	49	53	31	14	4	191
0	0	0	0	0	0	0	0	0	0	5	13	18	48	35	25	16	5	165
0	0	0	0	0	0	0	0	0	2	9	16	22	29	38	22	24	6	168
0	0	0	0	0	0	0	0	0	3	8	13	23	25	40	22	14	9	157
0	0	0	0	0	0	0	0	1	2	10	17	27	27	21	26	18	16	165
0	0	0	0	0	0	0	1	1	3	7	7	6	12	9	3	2	2	58
0	0	0	0	0	0	0	0	0	0	0	0	0	0	0	0	0	0	0
0	0	0	0	0	0	0	0	0	0	0	0	0	0	0	0	0	0	0
0	0	0	0	0	0	0	1	4	24	84	184	419	541	590	442	232	91	

y = 0.05"

y = 0.100"

Fig. 5 – Mode MPS 4
(see Fig. 1 caption)
(dotted line is a "tighter" slit)

y'

2.36 mrad

0	0	0	0	3	7	10	14	18	21	23	25	27	29	32	34
0	0	0	0	0	5	9	13	18	21	23	26	28	30	33	35
0	0	0	0	0	2	7	12	17	21	24	26	29	31	34	36
0	0	0	0	0	0	3	10	16	21	24	27	30	33	35	38
0	0	0	0	0	0	0	7	15	21	25	28	31	34	37	40
0	0	0	0	0	0	0	0	13	22	25	29	33	36	40	40
0	0	0	0	0	0	0	0	6	22	26	30	35	39	40	40
0	0	0	0	0	0	0	0	0	22	27	33	38	40	40	40
0	0	0	0	0	0	0	0	0	15	29	36	40	40	40	40
0	0	0	0	0	0	0	0	0	10	31	40	40	40	40	40
0	0	0	0	0	0	0	0	0	10	31	40	40	40	40	40
0	0	0	0	0	0	0	0	0	15	29	35	40	40	40	40
0	0	0	0	0	0	0	0	0	22	27	32	37	40	40	40
0	0	0	0	0	0	0	0	6	22	26	30	34	39	40	40
0	0	0	0	0	0	0	0	13	21	25	29	32	36	40	40
0	0	0	0	0	0	0	6	15	21	24	28	31	34	37	40
0	0	0	0	0	0	3	10	16	21	24	27	29	32	35	38
0	0	0	0	0	1	6	12	17	21	23	26	28	31	34	36
0	0	0	0	0	4	9	13	17	21	23	25	28	30	32	35
0	0	0	0	3	7	10	14	18	21	23	25	27	29	31	33

y

.061"

Fig. 6 - Scatterplot of the length of material traversed (inches) by a particle in the mass slit, as a function of y and y' at the center of the mass slit, for mode 3E.

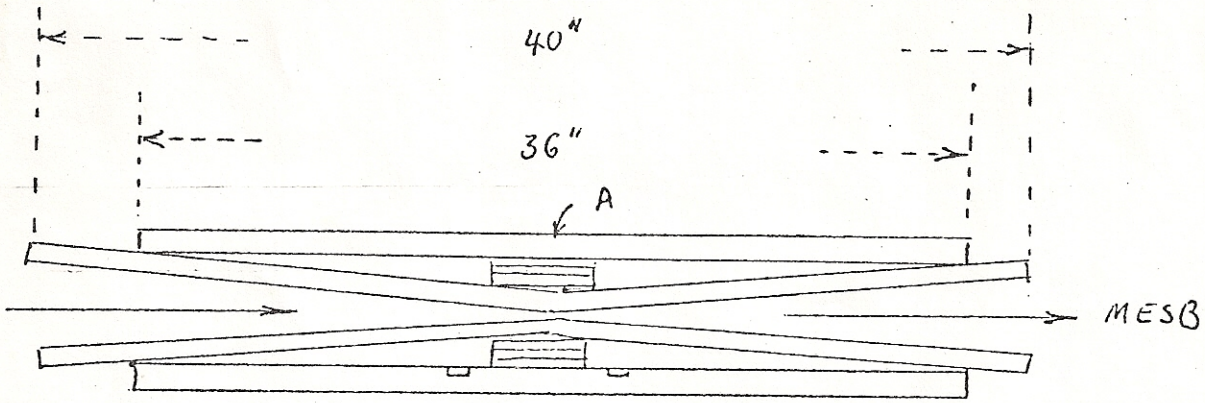

Mass Slit
(side view)
(not drawn to scale)

Fig. 7