BNL-104639-2014-TECH

AGS/AD/Tech Note No. 212;BNL-104639-2014-IR

MAXIMUM LIMITING APERTURES IN THE AGS

K. A. Brown

April 1985

Collider Accelerator Department

Brookhaven National Laboratory

U.S. Department of Energy

USDOE Office of Science (SC)

Notice: This technical note has been authored by employees of Brookhaven Science Associates, LLC under Contract No.DE-AC02-76CH00016 with the U.S. Department of Energy. The publisher by accepting the technical note for publication acknowledges that the United States Government retains a non-exclusive, paid-up, irrevocable, world-wide license to publish or reproduce the published form of this technical note, or allow others to do so, for United States Government purposes.

DISCLAIMER

This report was prepared as an account of work sponsored by an agency of the United States Government. Neither the United States Government nor any agency thereof, nor any of their employees, nor any of their contractors, subcontractors, or their employees, makes any warranty, express or implied, or assumes any legal liability or responsibility for the accuracy, completeness, or any third party's use or the results of such use of any information, apparatus, product, or process disclosed, or represents that its use would not infringe privately owned rights. Reference herein to any specific commercial product, process, or service by trade name, trademark, manufacturer, or otherwise, does not necessarily constitute or imply its endorsement, recommendation, or favoring by the United States Government or any agency thereof or its contractors or subcontractors. The views and opinions of authors expressed herein do not necessarily state or reflect those of the United States Government or any agency thereof.

Alternating Gradient Synchrotron Department
BROOKHAVEN NATIONAL LABORATORY
Associated Universities, Inc.
Upton, New York 11973

Accelerator Division
Technical Note

No. 212

MAXIMUM LIMITING APERTURES IN THE AGS

K.A. Brown and K.M. Brown

April 12, 1985

K.A. Brown 4/17/85

Maximum Limiting Apertures in the AGS

I. Convention Used in this Book:

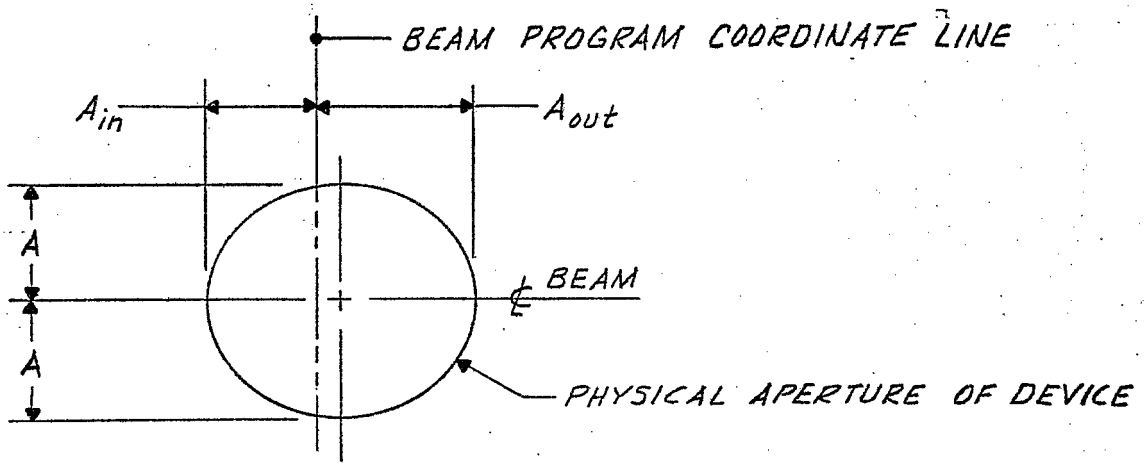

The direction in which the beam is traveling is into the paper. The direction to the center of the AGS is to the left of the page.

Defining A_L as the maximum limiting aperture as seen by the beam, then,

$$A_L = A[\beta_{max}/\beta]^{1/2},$$

where β and β_{max} are taken from E.D. Courant's Internal Report EDC-28, "Precision Computation of AGS Orbit Parameters" (see also the attached graph).

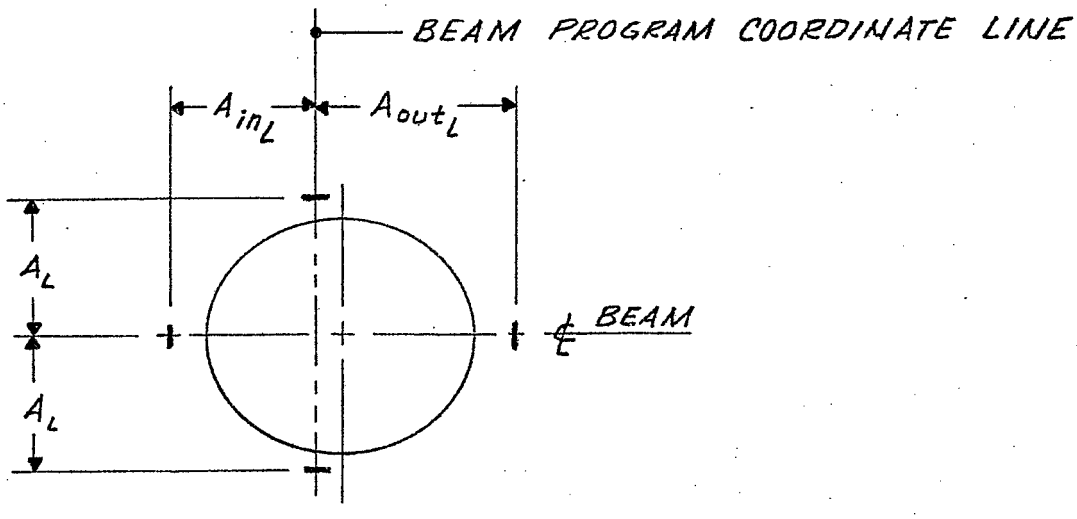

II. Uncertainty and Errors in A_L

The uncertainty in A_L is:

$$\frac{\partial A_L}{A_L} = \left[\left(\frac{\partial A}{A}\right)^2 + \left(\frac{1}{2}\ \frac{\partial \beta_{max}}{\beta_{max}}\right)^2 + \left(\frac{1}{2}\ \frac{\partial \beta}{\beta}\right)^2\right]^{1/2}$$

If ∂A is approximately 1/32", $\partial \beta_{max} \cong 0.05$, and $\partial \beta \cong 0.1$, then

$$\frac{\partial A_L}{A_L} \sim 1\% \text{ uncertain.}$$

This uncertainty is going to vary depending on many parameters. For example, the vacuum chambers will have a large uncertainty for the following reasons:

1. They are measured while at atmospheric pressure. How much this changes while there is vacuum is unknown.
2. When they are positioned into place their is a likelihood of as much as 1/8 of an inch uncertainty in their position.
3. The thickness in the walls of the chambers varies considerably.
4. What is the vertical survey of the ring? The vacuum chambers are close to being the vertical limiting aperture in the machine.

Therefore, for the vacuum chambers, this uncertainty will be greater. On the other hand, many devices are surveyed in very precisely and constructed very precisely, and the uncertainty will then be less.

The extraction equipment (E5, H5, F5, F10, and H10) has been taken to be positioned in the normal operating position according to the blueprints. This is not the actual normal operating position. A valuable reference for finding the actual positions are the FEB/SEB data books in the Main Control Room.

All the device drawings show the maximum limiting aperture at the position in the ring where the device is located. One exception is the magnet vacuum chamber drawing. This shows the maximum limiting aperture for the horizontal and vertical apertures, which do not lie in the same place in the ring.

Other devices may not be positioned as shown. This depends on how they were placed in initially and then may have been changed. An example is the E10 IPM which was moved a fraction of a centimeter horizontally into the ring. Another example is the E20 beam catcher which is a movable device and whose vertical and horizontal apertures are changed when it is moved.

References

1. Precision Computation of AGS Orbit Parameters, E.D. Courant, BNL Internal Report EDC-28, December 4, 1958.

2. BNL Memorandum, "Devices in AGS Ring", from M. Zguris/K.A. Brown, November 13, 1984.

3. Reference Drawings:
   i. AGS Component Layout, D05-M-1224-5.
   ii. AGS Vacuum System Typical 5 Ft. Straight Section, C-D95-M-865-2.
   iii. AGS Vacuum System Typical 10 ft. Straight Section, C-D05-M-864-2.

HORIZONTAL & VERTICAL β FUNCTION

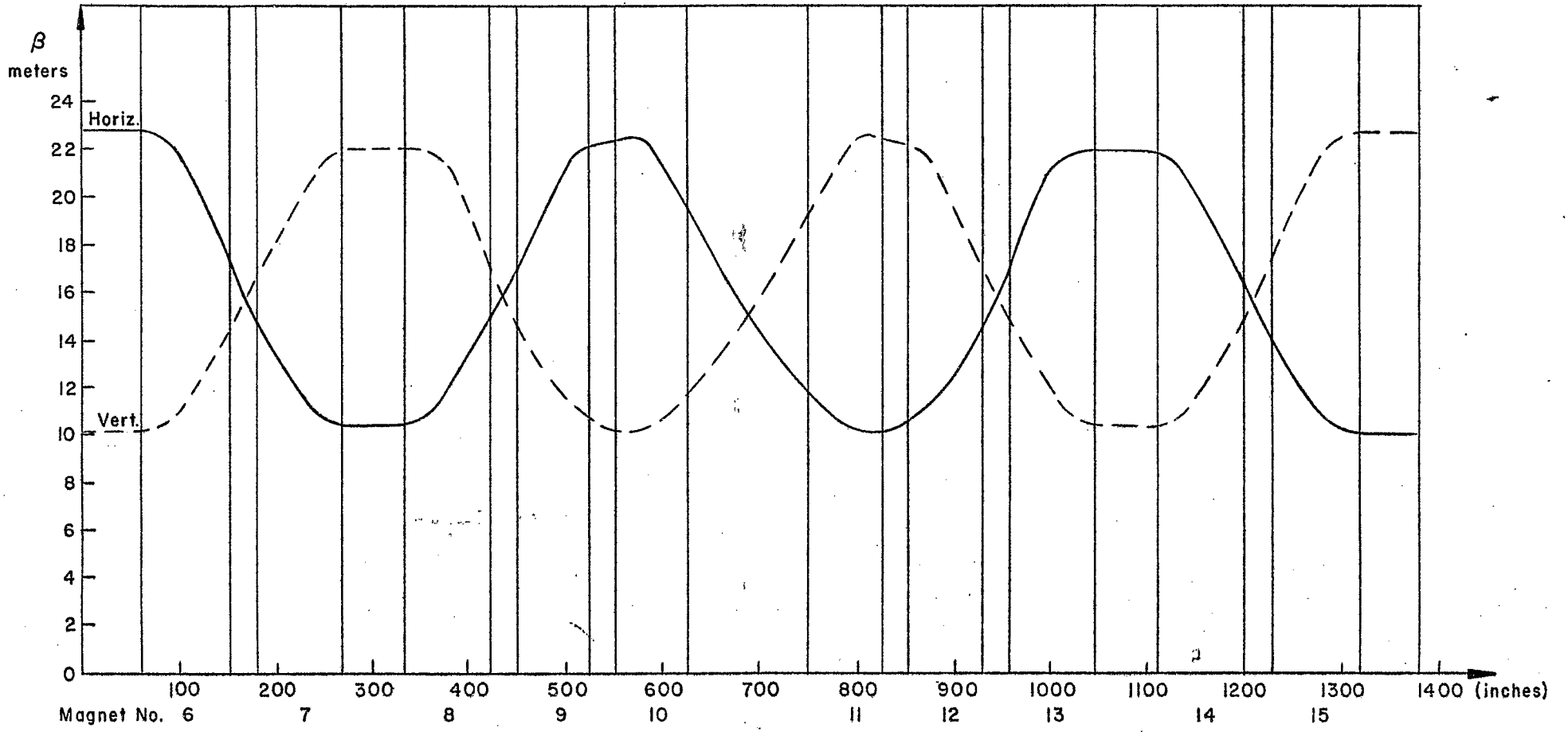

MAXIMUM LIMITING APERTURES WITH RESPECT TO BEAM PROGRAM COORDINATE LINE

HORIZONTAL APERTURES

β_{max} = 22.745 ± 0.0005 meters

Devices	β (meters) ± 0.1	A_{out} (in)	A_{in} (in)	$(\beta_{max}/\beta)^{1/2}$	$A_{out,L}$	$A_{in,L}$
B1 (foil)	21.9	2.329	3.422	1.02	2.37	3.49
B2 (graphite)	22.0	3.641	3.422	1.02	3.70	3.48
(A, I, K) 3 US	10.4	2.394	2.776	1.48	3.54	4.11
(A, I, K) 3 DS	10.4	2.207	2.589	1.48	3.26	3.83
(B→H, J, L) 3	10.4	2.682	3.064	1.48	3.97	4.53
L5	22.7	3.733	3.517	1.00	3.73	3.52
(A→E, G, J→K) 5	22.7	2.682	3.064	1.00	2.68	3.06
(G, J, L) 7 US	10.4	2.394	2.776	1.48	3.54	4.11
(G, J, L) 7 DS	10.4	2.207	2.589	1.48	3.26	3.83
(A→F, H, I, K) 7	10.4	2.682	3.064	1.48	3.97	4.53
A10 Tune Meter US	18.8	2.860	2.860	1.10	3.15	3.15
A10 Tune Meter DS	17.9	2.920	2.920	1.13	3.30	3.30
E10 IPM US	16.9	2.392	2.296	1.16	2.77	2.66
E10 IPM DS	15.1	3.108	2.892	1.23	3.82	3.56
G10 Polarimeter Inserted	17.4	3.303	3.455	1.14	3.77	3.94
I10 Damper	14.9	2.875	2.875	1.24	3.57	3.57
A13	21.9	2.682	3.064	1.02	2.73	3.12
(B→L) 13	21.9	2.682	3.064	1.02	2.73	3.12
15 (ferrite quads)	10.1	2.028	2.410	1.50	3.04	3.62
(A→L) 17	21.9	2.682	3.064	1.02	2.73	3.12
E20 US	12.7	2.973	1.873	1.34	3.84	2.51
E20 DS	18.2	3.123	2.123	1.12	3.50	2.38
L20 Current Xformer	19.1	2.764	2.548	1.19	3.29	3.03
Mag. Vac. Ch.	22.7	3.406	3.406	1.00	3.41	3.41
RF Cav. 10 US	18.5	2.952	2.736	1.11	3.27	3.03
RF Cav. 20 DS	18.5	2.952	2.736	1.11	3.27	3.03
E5 US	22.7	2.018	3.481	1.00	2.02	3.48
E5 DS	22.7	2.068	3.481	1.00	2.07	3.48
H5 US	22.7	2.018	3.481	1.00	2.02	3.48
H5 DS	22.7	2.068	3.481	1.00	2.07	3.48
F5 Nominal	22.7	2.349	3.481	1.00	2.35	3.48
F10 Nominal US	18.5	2.102	3.306	1.11	2.33	3.67
F10 Middle	16.1	1.793	3.306	1.19	2.13	3.93
F10 DS	15.7	1.843	3.314	1.20	2.21	3.98
H10 Nominal US	18.3	2.642	3.306	1.11	2.93	3.67
H10 DS	12.6	2.250	3.314	1.34	3.02	4.45

4/22/85

MAXIMUM LIMITING APERTURES WITH RESPECT TO BEAM PROGRAM COORDINATE LINE

VERTICAL APERTURES

β_{max} = 22.745 ± 0.0005 meters

Devices	β (meters) ± 0.1	A (inches)	$(\beta_{max}/\beta)^{1/2}$	A_L (inches)
B1 (foil)	10.4	1.488	1.48	2.20
B2 (graphite)	14.5	1.547	1.25	1.94
(A, I, K) 3 US	21.9	1.960	1.02	2.00
(A, I, K) 3 DS	21.9	1.835	1.02	1.87
(B→H, J, L) 3	21.9	2.973	1.02	2.93
L5	10.1	3.625	1.50	5.44
(A→E, G, J→K) 5	10.1	2.973	1.50	4.31
(G, J, L) 7 US	21.9	1.960	1.20	2.00
(G, J, L) 7 DS	21.9	1.835	1.20	1.87
(A→F, H, I, K) 7	21.9	2.973	1.20	2.93
A10 Tune Meter US	14.0	1.250	1.27	1.59
A10 Tune Meter DS	17.3	1.250(up) 1.313(down)	1.15	1.44(up) 1.51(down)
E10 IPM US	14.9	3.000	1.53	4.59
E10 IPM DS	16.9	2.188(up) 2.500 (down)	1.16	2.54(up) 2.90(down)
G10 Polarimeter Inserted	13.5	1.88	1.30	2.44
I10 Damper	19.1	1.500	1.19	1.64
A13	10.4	2.973	1.48	4.25
(B→L) 13	10.4	2.873	1.48	4.25
15 (ferrite quads)	22.7	1.469	1.00	1.47
(A→L) 17	10.4	2.873	1.48	4.25
E20 US	18.5	1.435	1.11	1.59
E20 DS	12.9	1.091	1.33	1.45
L20 Current Xformer	19.1	2.656	1.19	2.92
Mag. Vac. Ch.	22.7	1.531	1.00	1.53
RF Cav. 10 US	12.7	2.844	1.34	3.81
RF Cav. 20 DS	12.7	2.844	1.34	3.81
E5 US	10.1	0.283	1.50	0.43
E5 DS	10.1	0.283	1.50	0.43
H5 US	10.1	0.283	1.50	0.43
H5 DS	10.1	0.283	1.50	0.43
F5 Nominal	10.1	0.350	1.50	0.53
F10 Nominal US	14.5	0.390	1.25	0.488
F10 Middle	14.8	0.390	1.24	0.484
F10 DS	18.3	0.390	1.11	0.433
H10 Nominal US	12.8	0.490	1.33	0.652
H10 DS	18.9	0.490	1.10	0.539

4/22/85

4-23-85

HORIZONTAL LIMITING APERTURES OF DEVICES WITH APERTURES LESS THAN 3.15

← DIRECTION TO CENTER OF RING

BEAM PROGRAM COORDINATE LINE

A_{in_L}	A_{out_L}	
2.66	2.77	E10 IPM U/S
3.48	2.02	E5 U/S
3.48	2.02	H5 U/S
3.48	2.07	E5 D/S
3.48	2.07	H5 D/S
3.06	2.68	(A-E,G,J-K) 5
3.48	2.35	F5 NOMINAL
3.12	2.73	A13
3.12	2.73	(B-L) 13
3.12	2.73	(A-L) 17
3.49	2.37	B1 (FOIL)
2.38	3.50	E20 D/S
3.67	2.33	F10 U/S
3.93	2.13	F10 MIDDLE
3.98	2.21	F10 D/S
3.03	3.27	RF CAVITY 10 U/S
3.03	3.27	RF CAVITY 20 D/S
3.15	3.15	A10 TUNE METER U/S
3.03	3.29	L20
2.51	3.84	E20 U/S
3.67	2.93	H10 U/S
3.62	3.04	(A-L) 15 FERRITE QUADS
4.45	3.02	H10 D/S

4-23-85

VERTICAL LIMITING APERTURES OF DEVICES WITH APERTURES LESS THAN 2.50

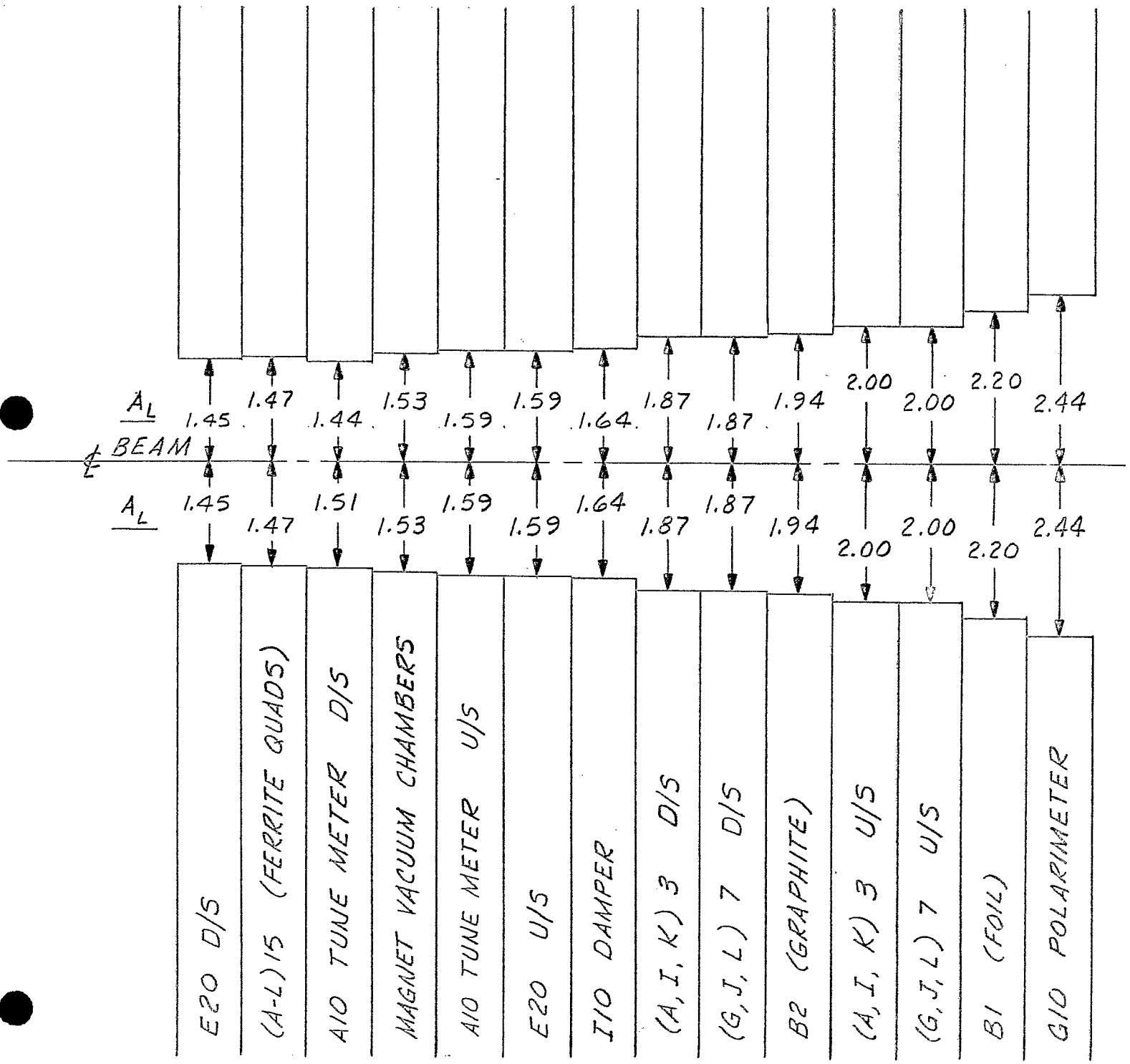

4-10-85

VERTICAL LIMITING APERTURES AT EXTRACTION

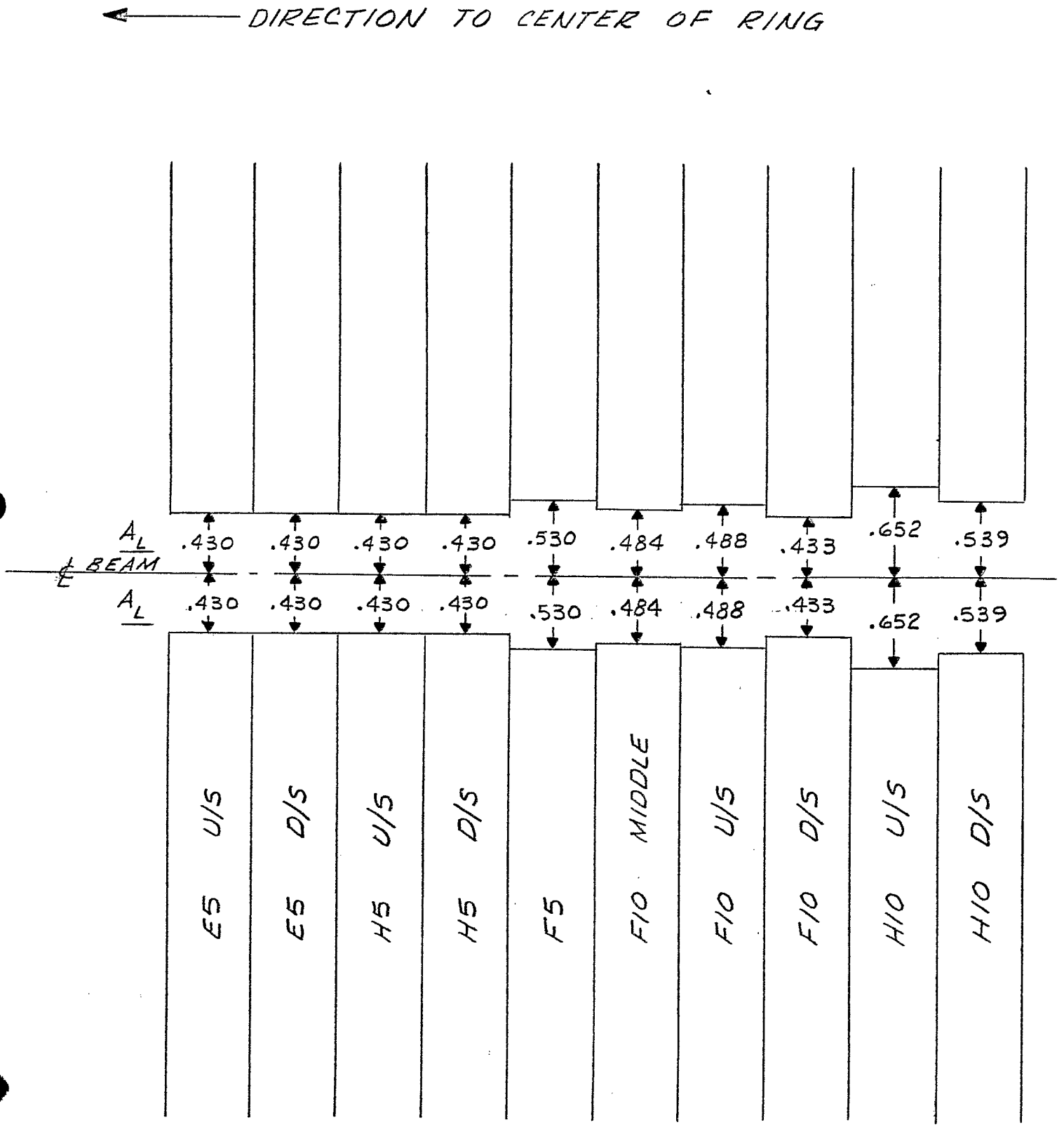

4-10-85

DISTANCE ALONG #10 & #20 STRAIGHT SECTIONS TO LIMITING APERTURES

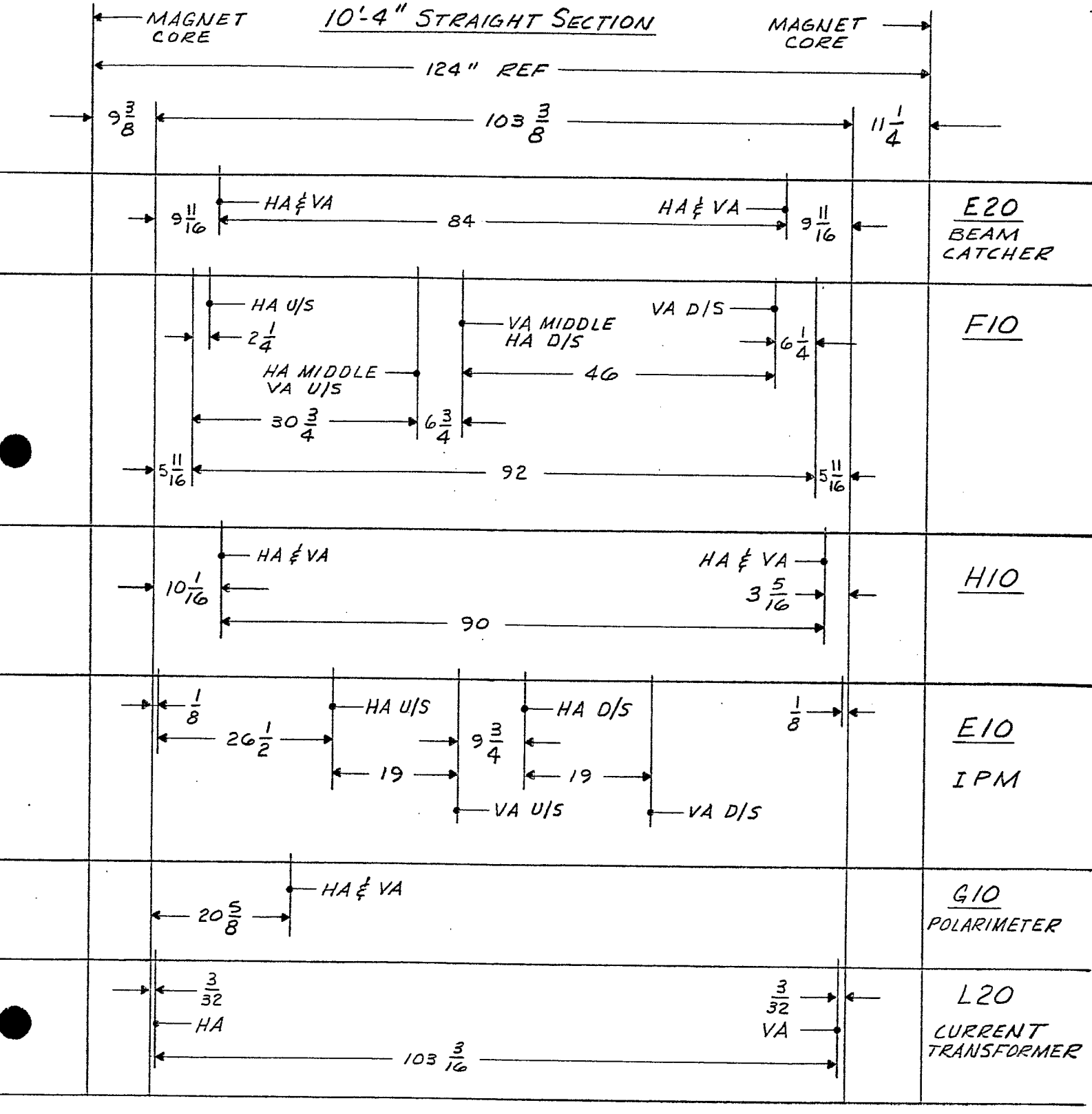

4-10-85

DISTANCE ALONG #10 & #20 STRAIGHT SECTION TO LIMITING APERTURES

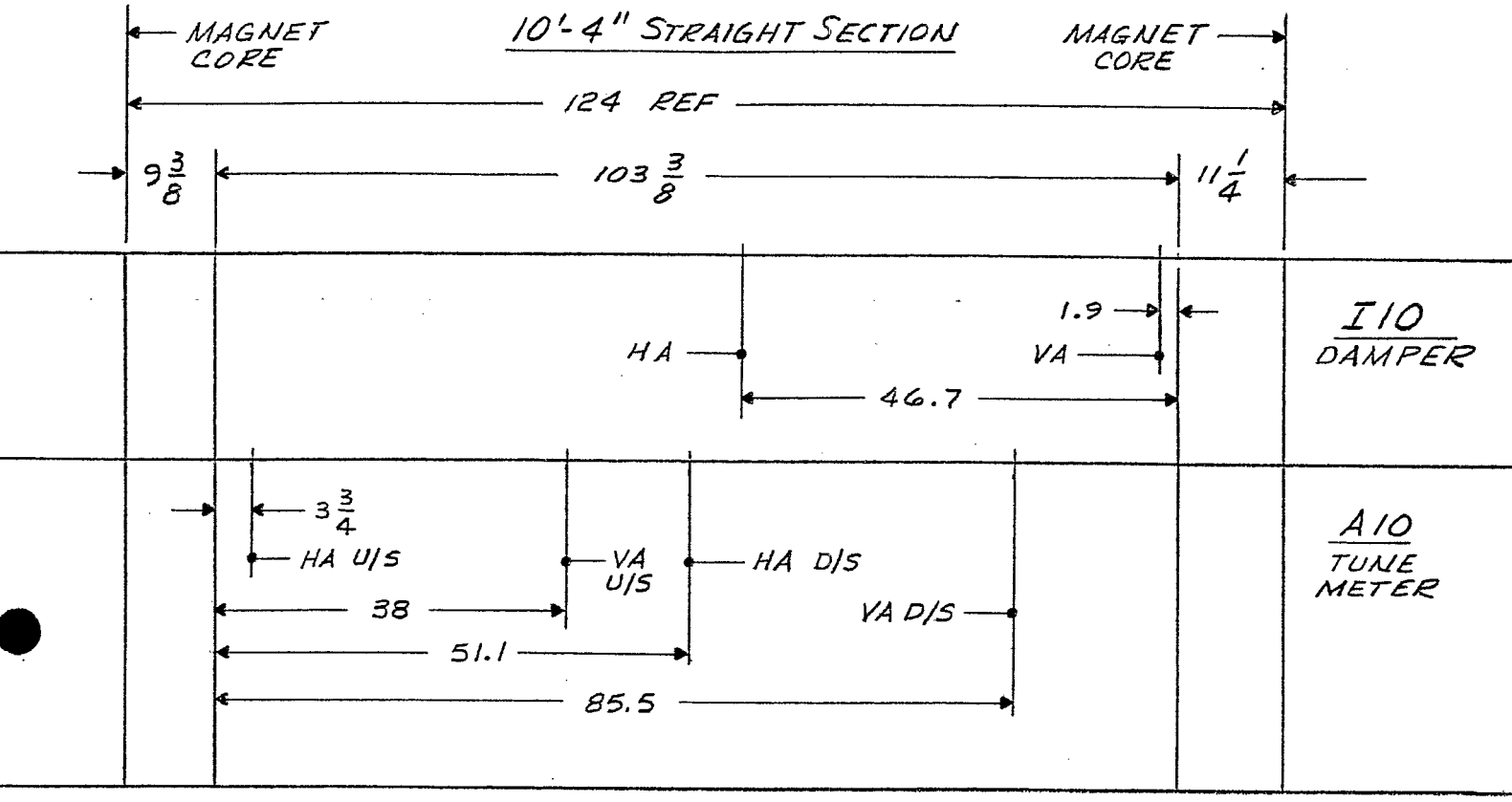

VIEW LOOKING DOWNSTREAM

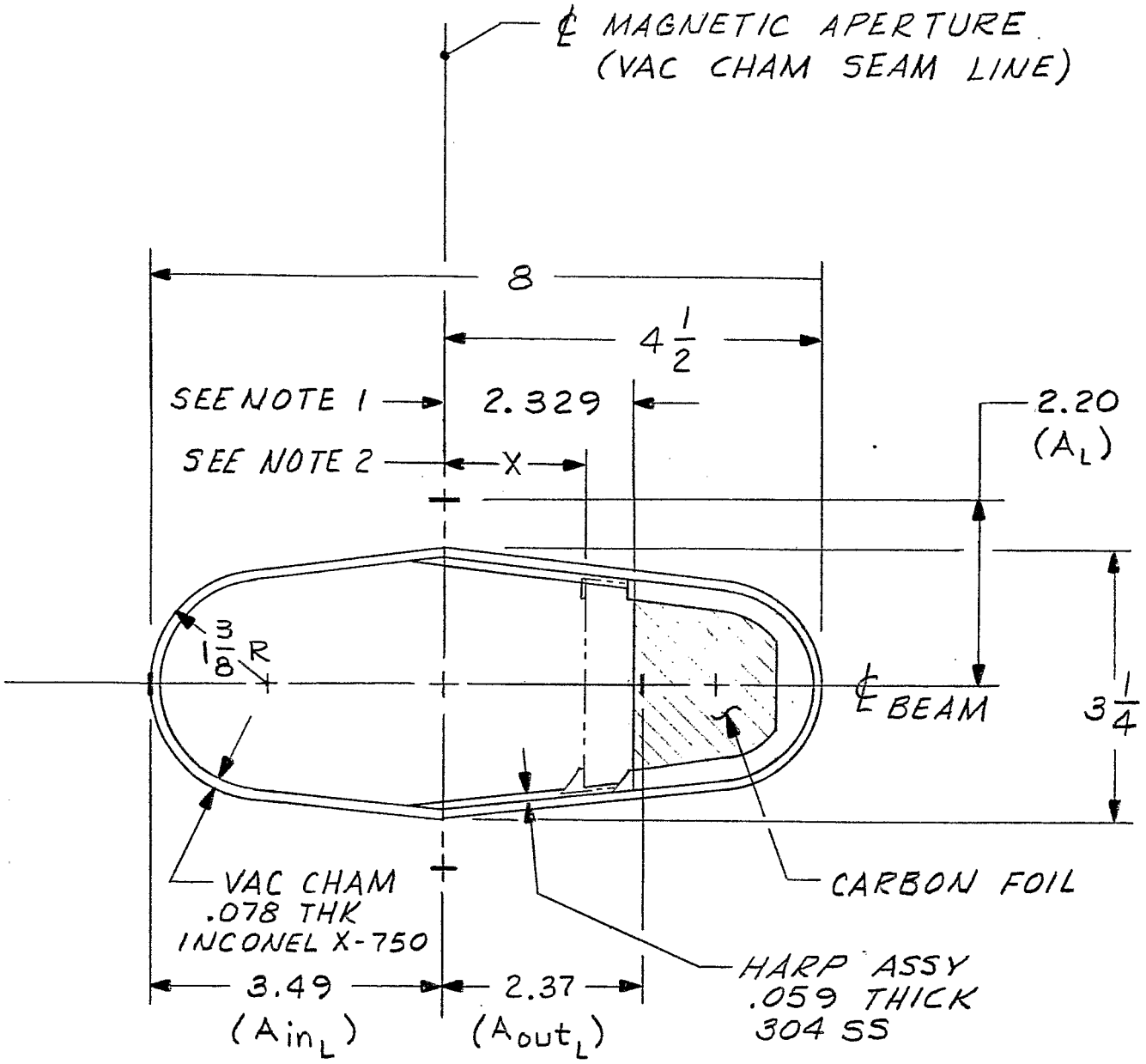

NOTES:

1. FULLY INSERTED - DVM READING 9.515
2. PARTIALLY INSERTED - FOR DVM READING (V) DISTANCE (X) FOUND BY: $X = 2.329 - 3(9.515 - V)$ FOR $V = 9.321$, $X = 1.747$

B1

H(-) CARBON FOIL MECHANISM

REF DWGS: D25-M-2178-5 & D25-M-2091-5

VIEW LOOKING DOWNSTREAM

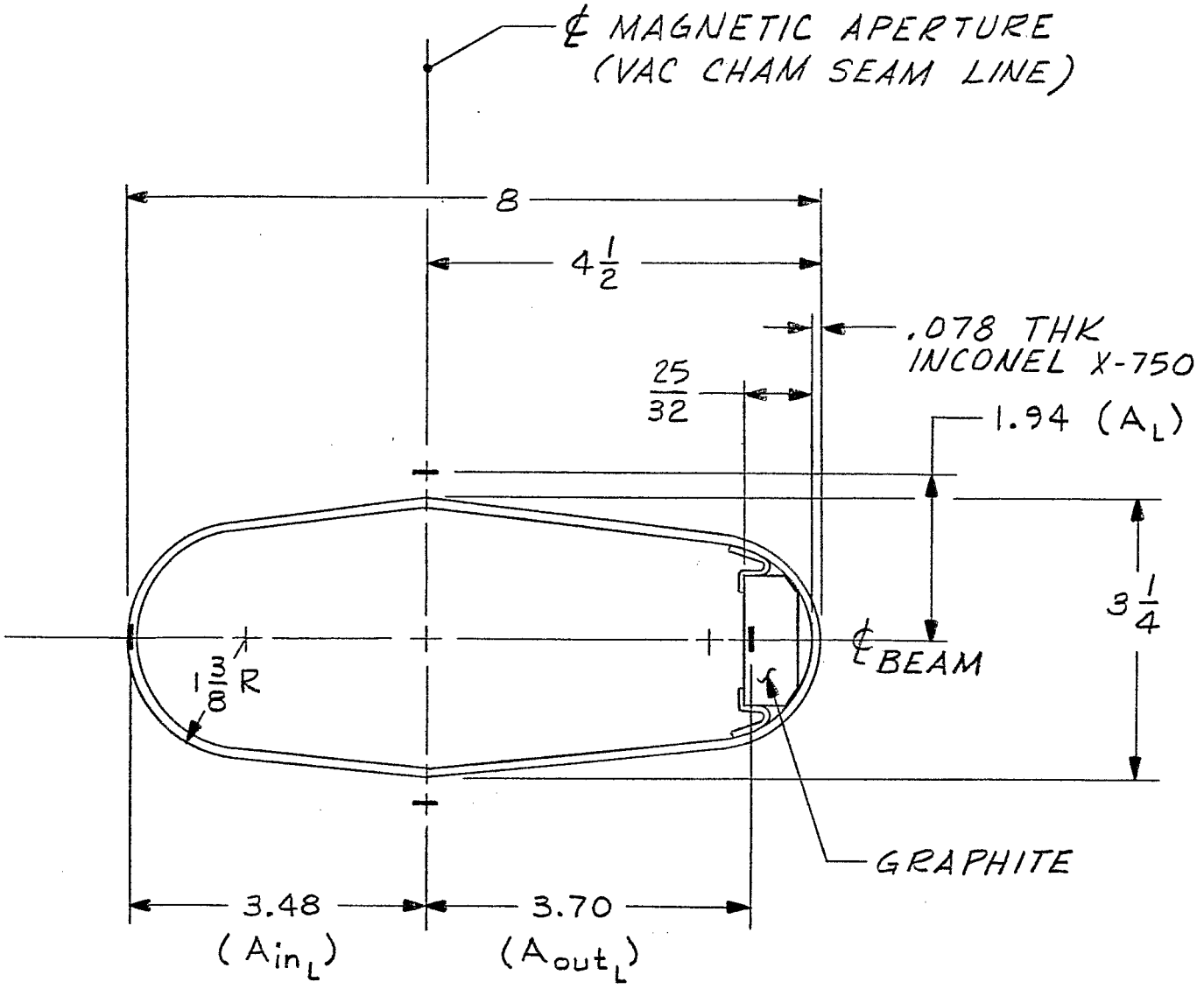

B2

REF: D25-M-2108-5 & D11-M-7212-5

SECTION THRU UPSTREAM END
VIEW LOOKING DOWNSTREAM

3-20-85

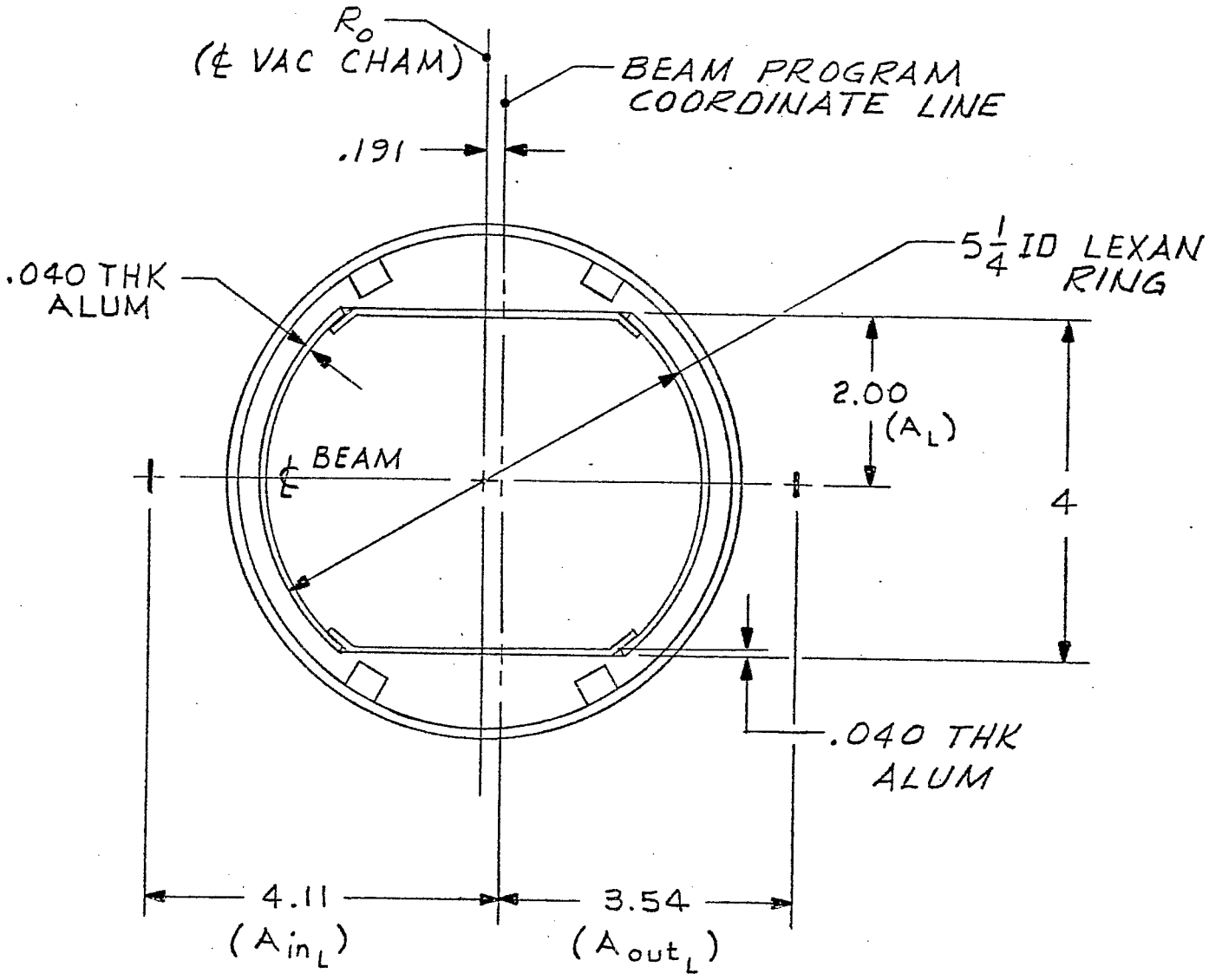

A3, I3, K3

VERTICAL PICK-UP ELECTRODE

REF DWGS: D06-M-165-4 & D06-M-254-4

SECTION THRU DOWNSTREAM END
VIEW LOOKING DOWNSTREAM

3-20-85

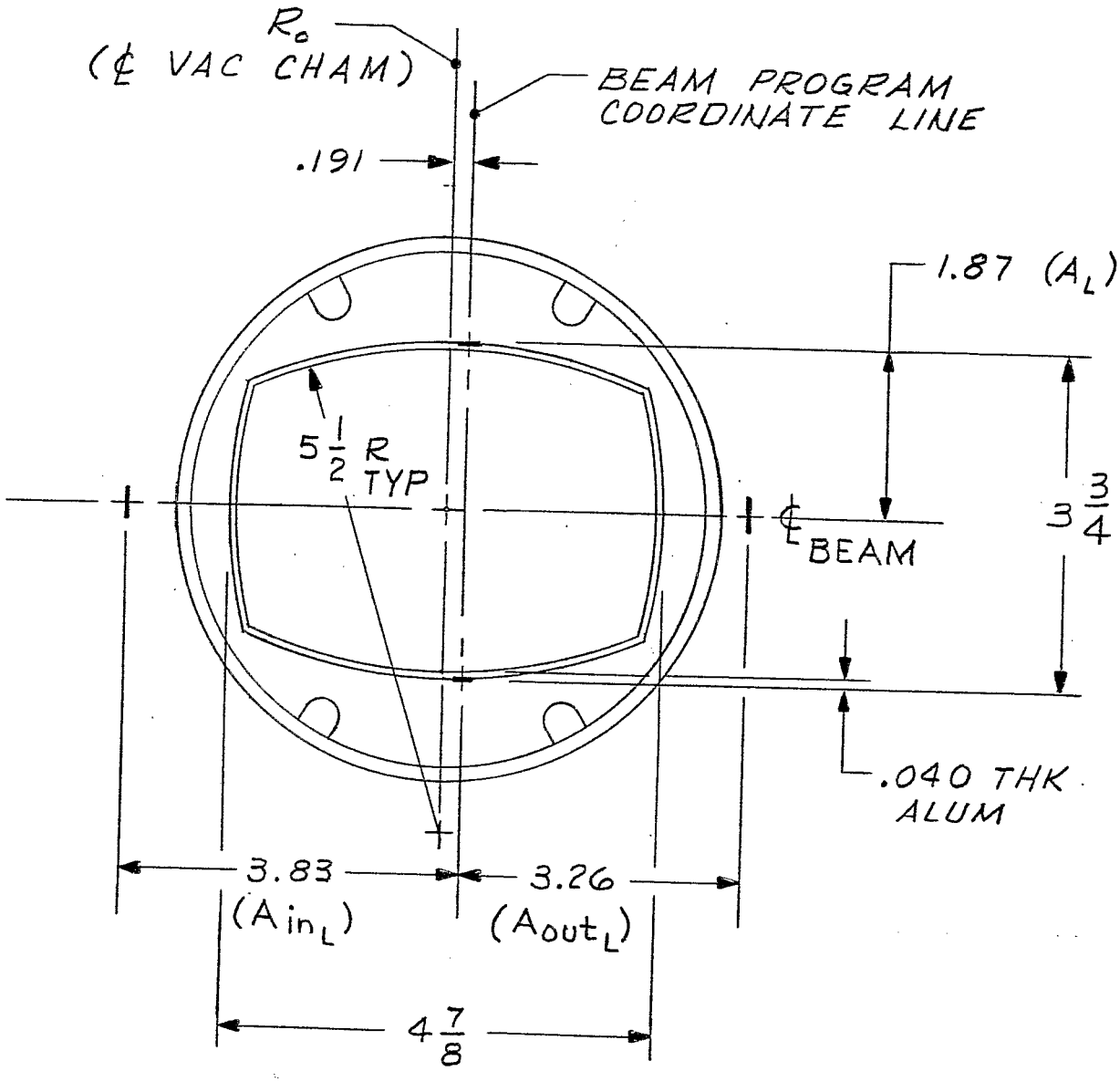

A3, I3, K3
HORIZONTAL PICK-UP ELECTRODE

REF DWGS: D06-M-254-4 & D06-M-165-4

3-15-85

VIEW LOOKING DOWNSTREAM

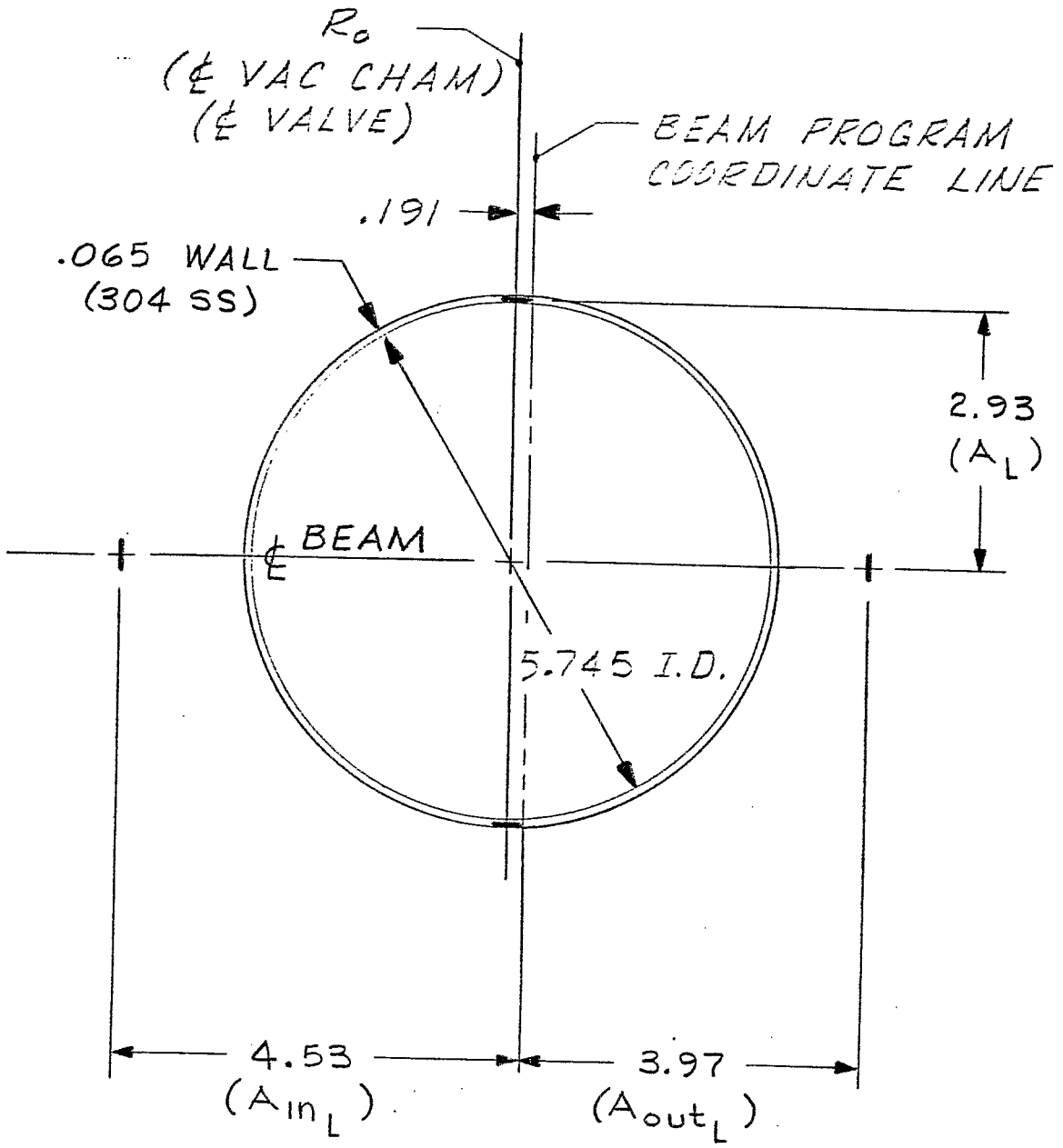

B3 THRU H3, J3, L3

REF DWGS: D05-M-959-4 & D05-M-962

3-20-85

VIEW LOOKING DOWNSTREAM

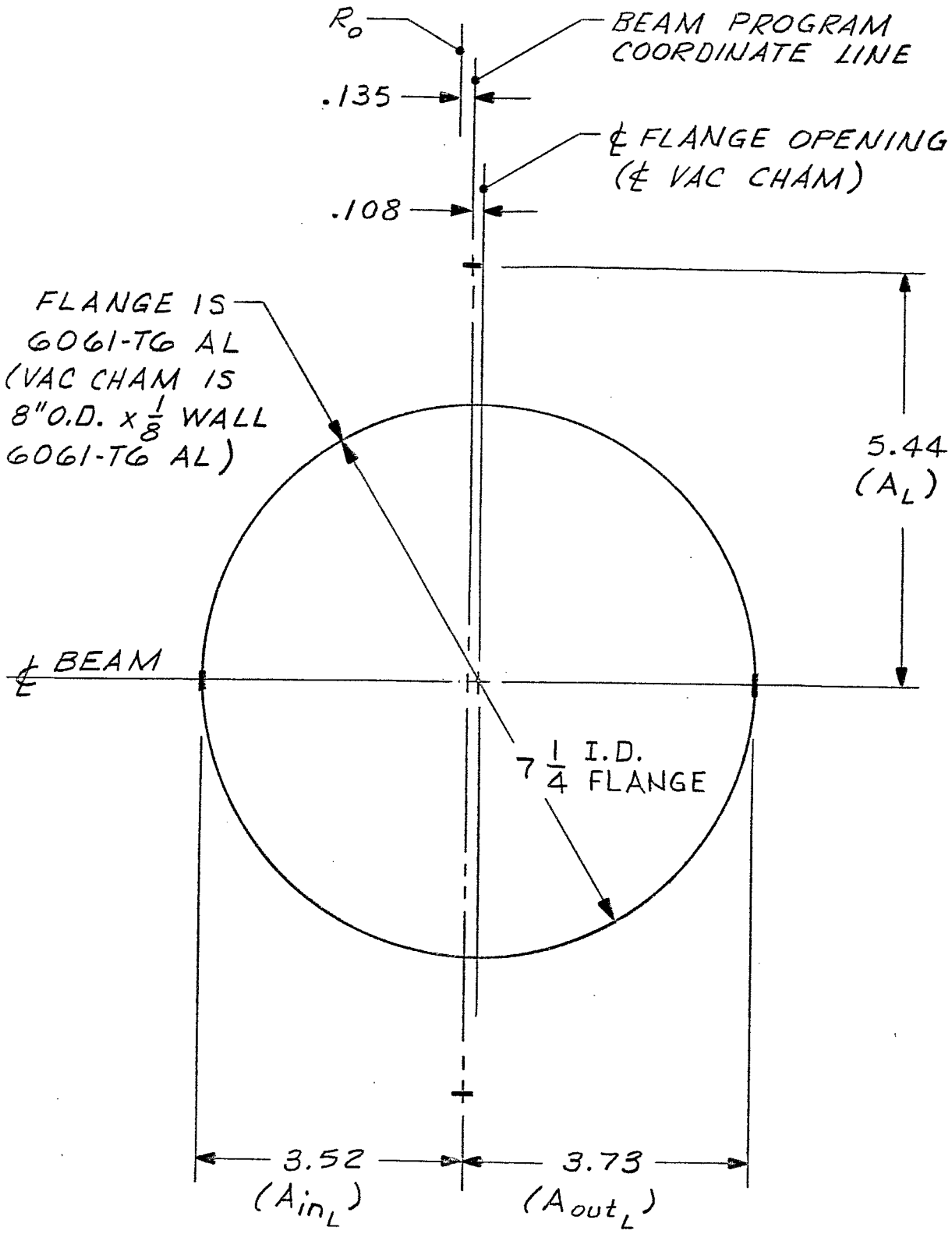

L5

REF DWG: D05-M-1701

VIEW LOOKING DOWNSTREAM

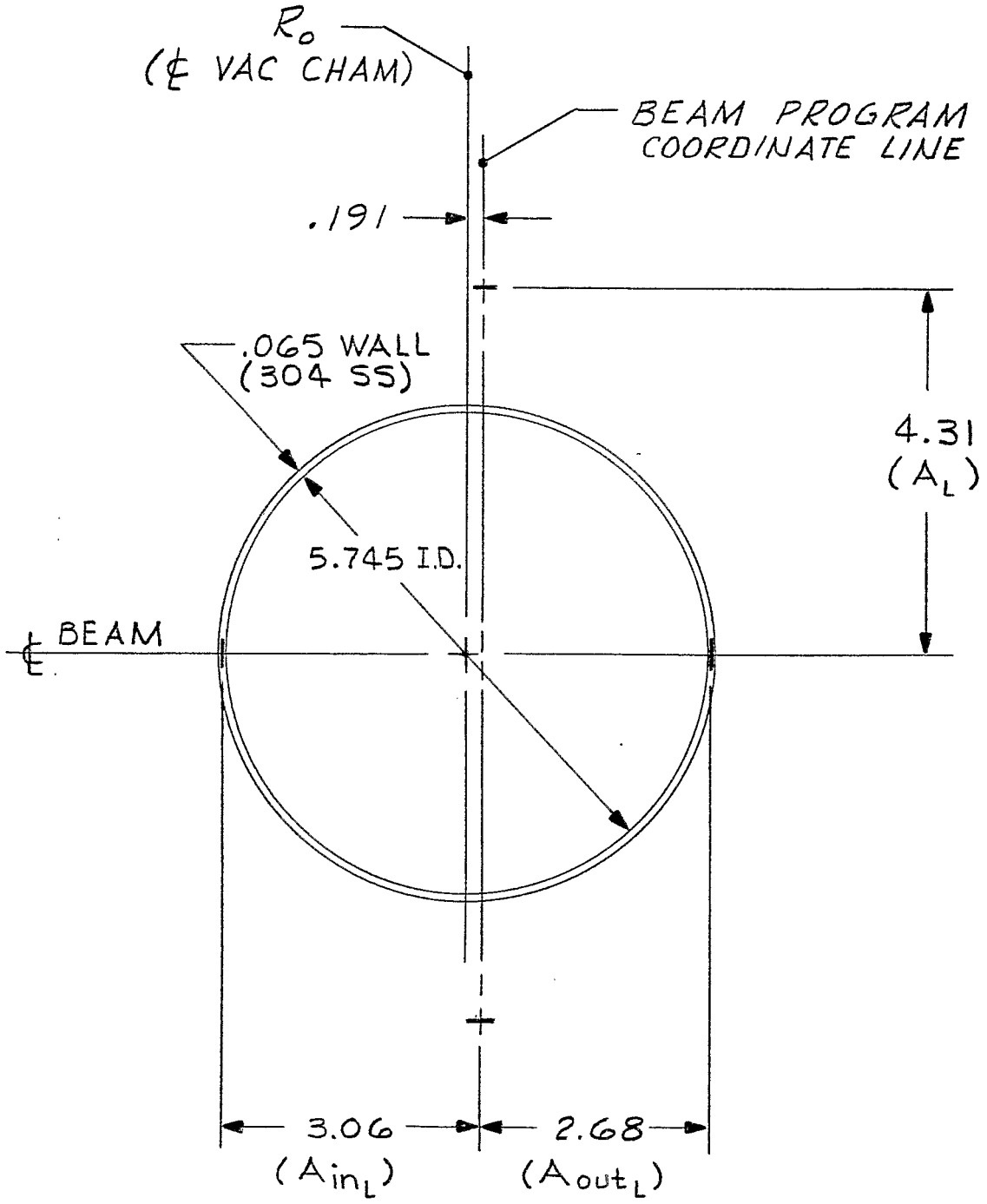

A5 THRU E5, G5, I5 THRU K5

REF DWGS: D05-M-960-5

SECTION THRU UPSTREAM END
VIEW LOOKING DOWNSTREAM

3-20-85

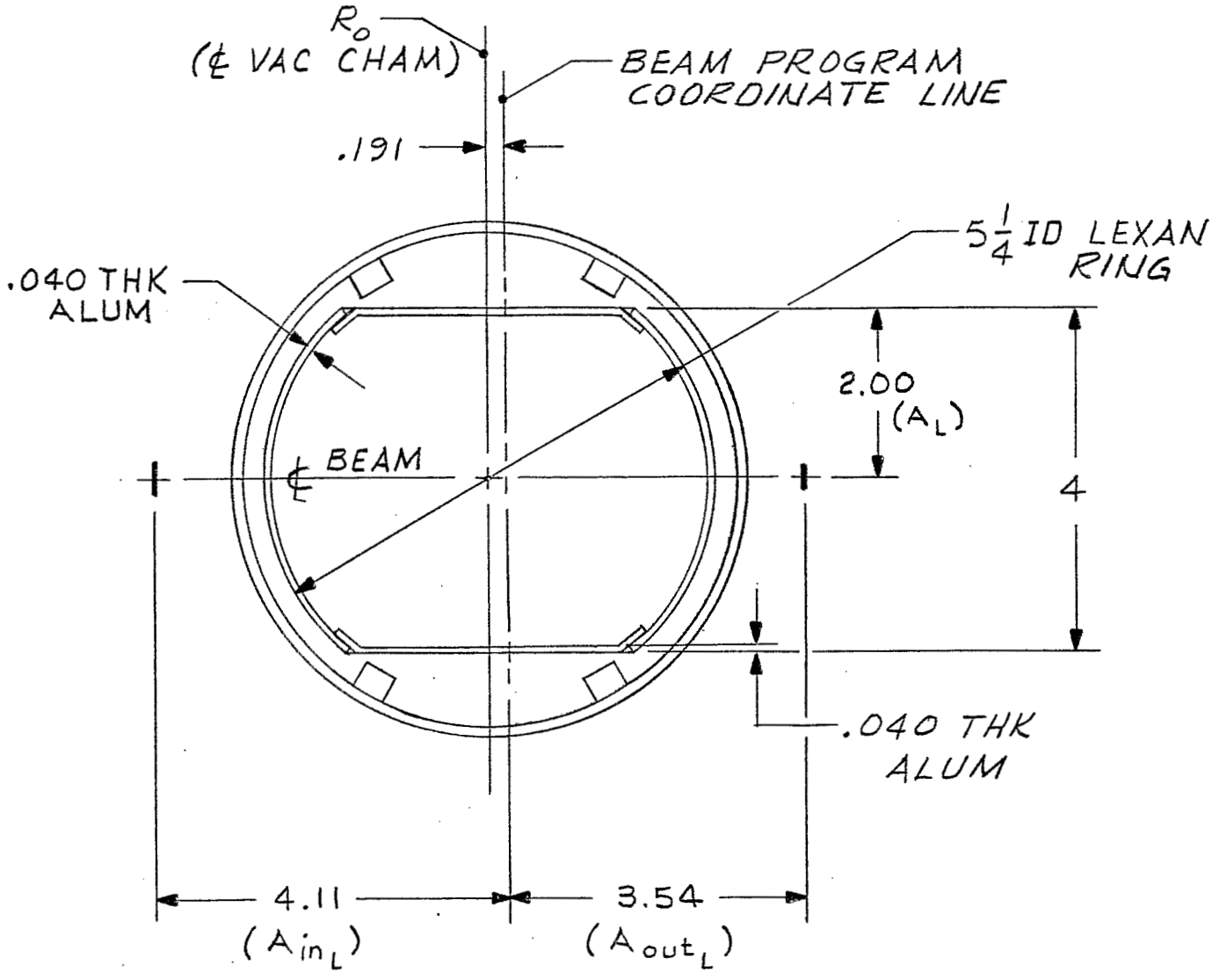

G7, J7, L7
VERTICAL PICK-UP ELECTRODE

REF DWGS: D06-M-165-4 & D06-M-254-4

SECTION THRU DOWNSTREAM END

VIEW LOOKING DOWNSTREAM

3-20-85

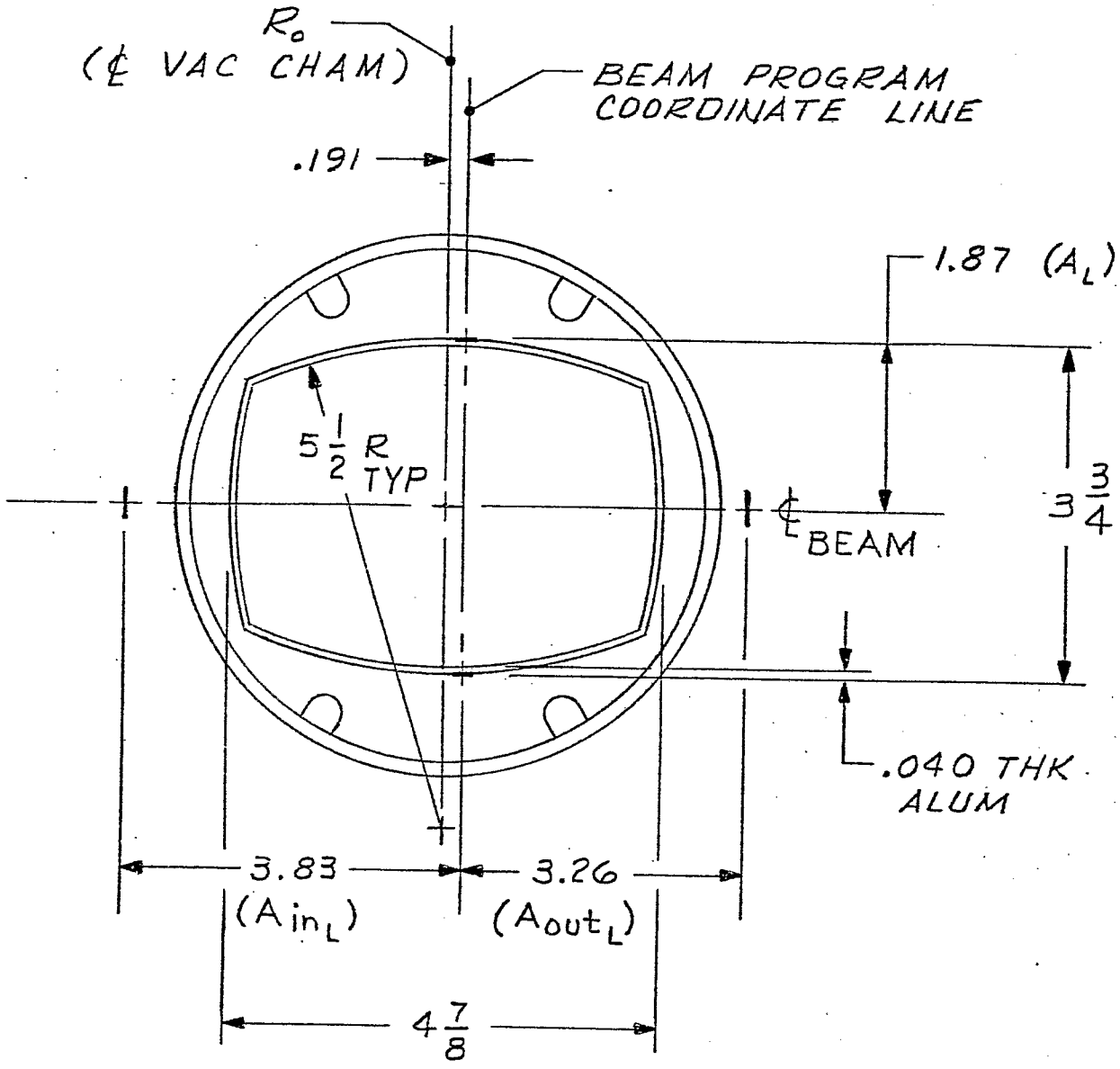

G7, J7, L7

HORIZONTAL PICK-UP ELECTRODE

REF DWGS: D06-M-254-4 & D06-M-165-4

3-19-85

VIEW LOOKING DOWNSTREAM

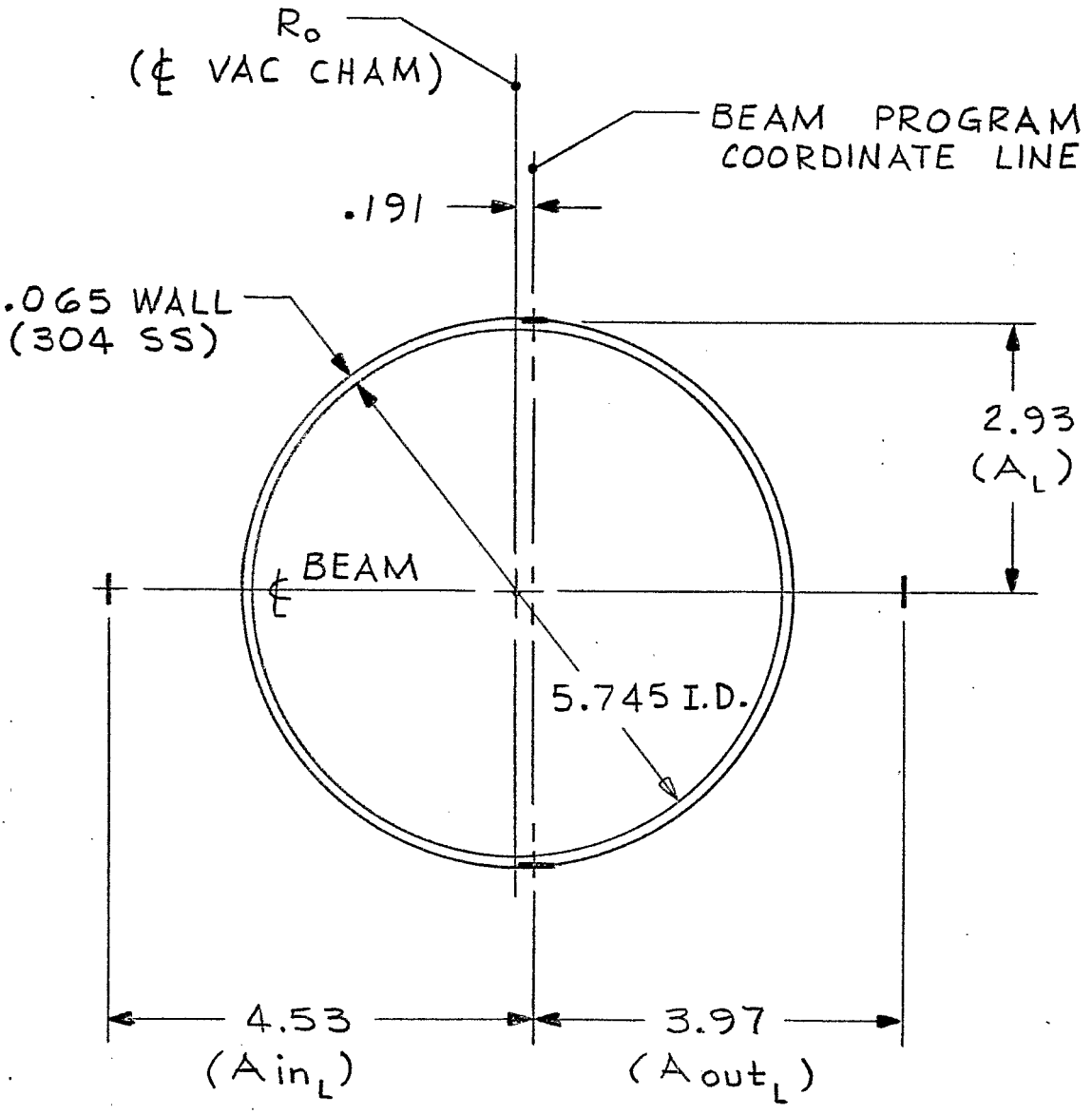

A7 THRU F7, H7, I7, K7

REF DWGS: D05-M-960-5

UPSTREAM BOX ASSEMBLY
VIEW LOOKING DOWNSTREAM

4-10-85

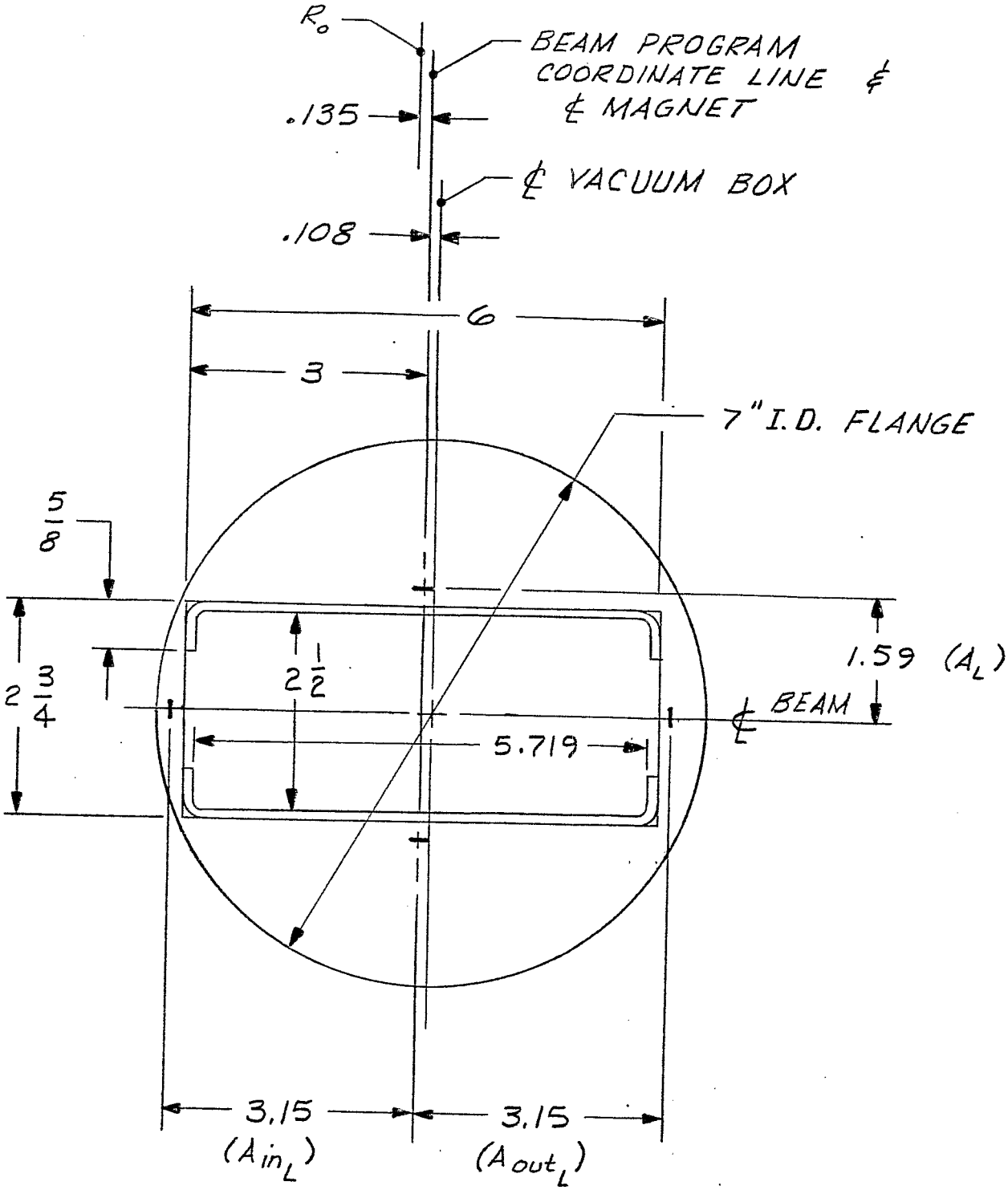

A10
BEAM TUNE METER

REF DWGS : D11-M-11455-5, D11-M-11454-5 & D11-M-11453-5

DOWNSTREAM BOX ASSEMBLY

4-10-85

VIEW LOOKING DOWNSTREAM

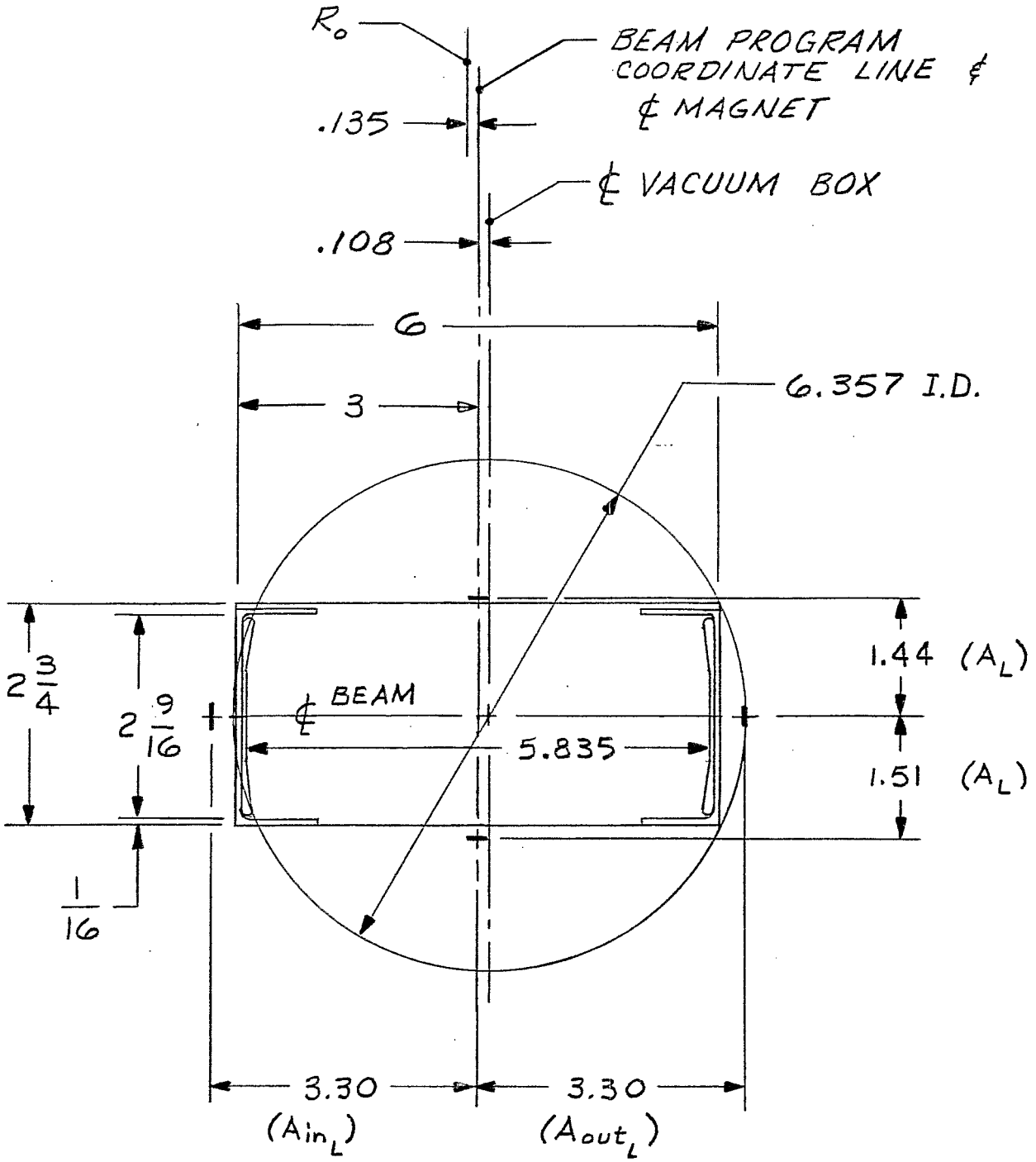

A10

BEAM TUNE METER

REF DWGS: D11-M-11455-5, D11-M-11453-5 & D11-M-11454-5

UPSTREAM VACUUM BOX
VIEW LOOKING DOWNSTREAM

4-5-85

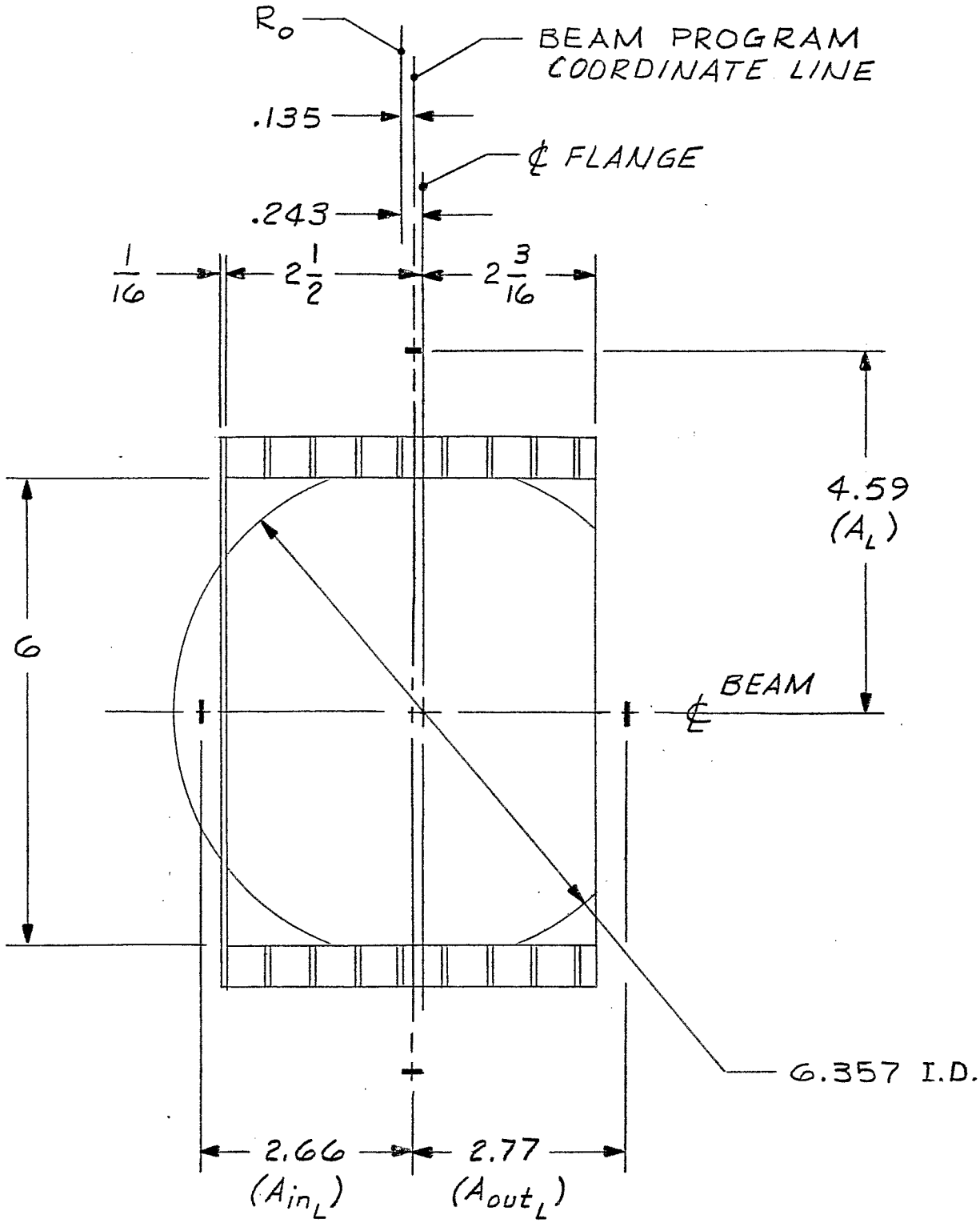

E 10
IONIZATION PROFILE MONITOR

REF DWGS: D11-M-11190-5 & D11-M-11187-5

DOWNSTREAM VACUUM BOX
VIEW LOOKING DOWNSTREAM

4-5-85

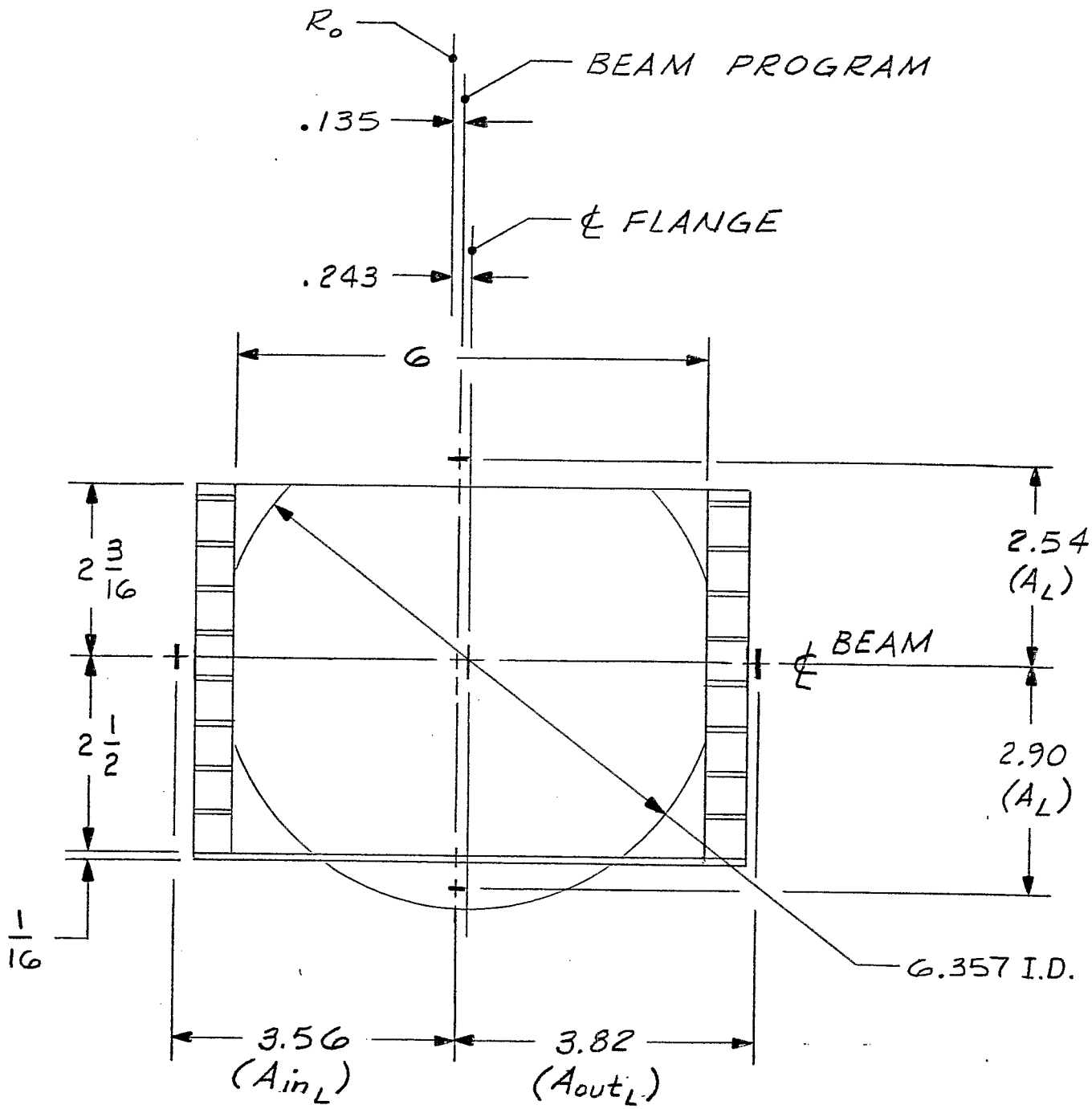

E10

IONIZATION PROFILE MONITOR

REF DWGS: D11-M-11190-5 & D11-M-11187-5

INSERTED POSITION
VIEW LOOKING DOWNSTREAM

4-10-85

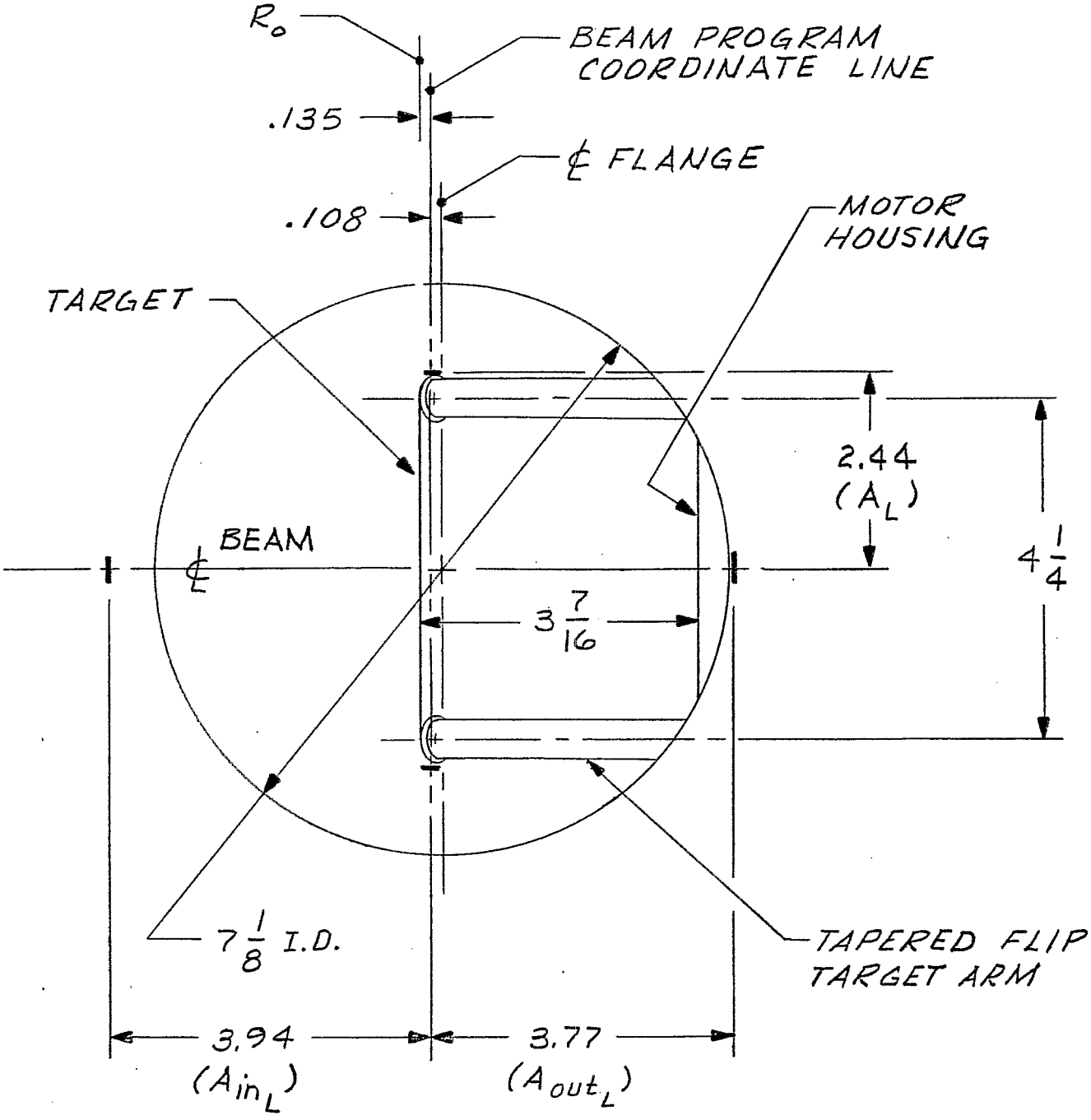

G10
POLARIMETER

REF DWGS: D11-M-11273-5 & D11-M-11282-5

4-10-85

VIEW LOOKING DOWNSTREAM

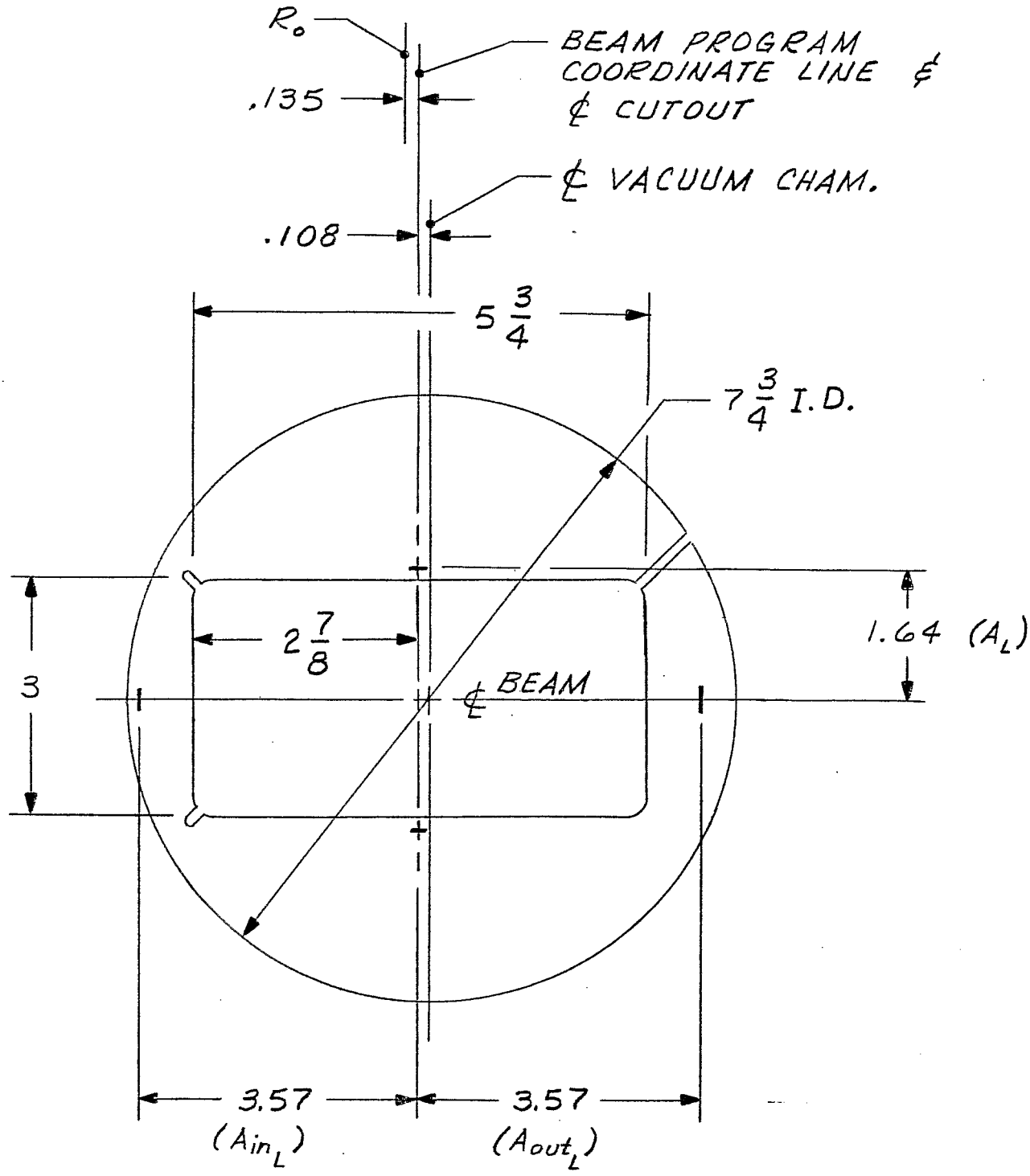

I 10

COHERENCE DAMPER

REF DWGS: D11-M-11570-5 & D11-M-11573-4

3-19-85

VIEW LOOKING DOWNSTREAM

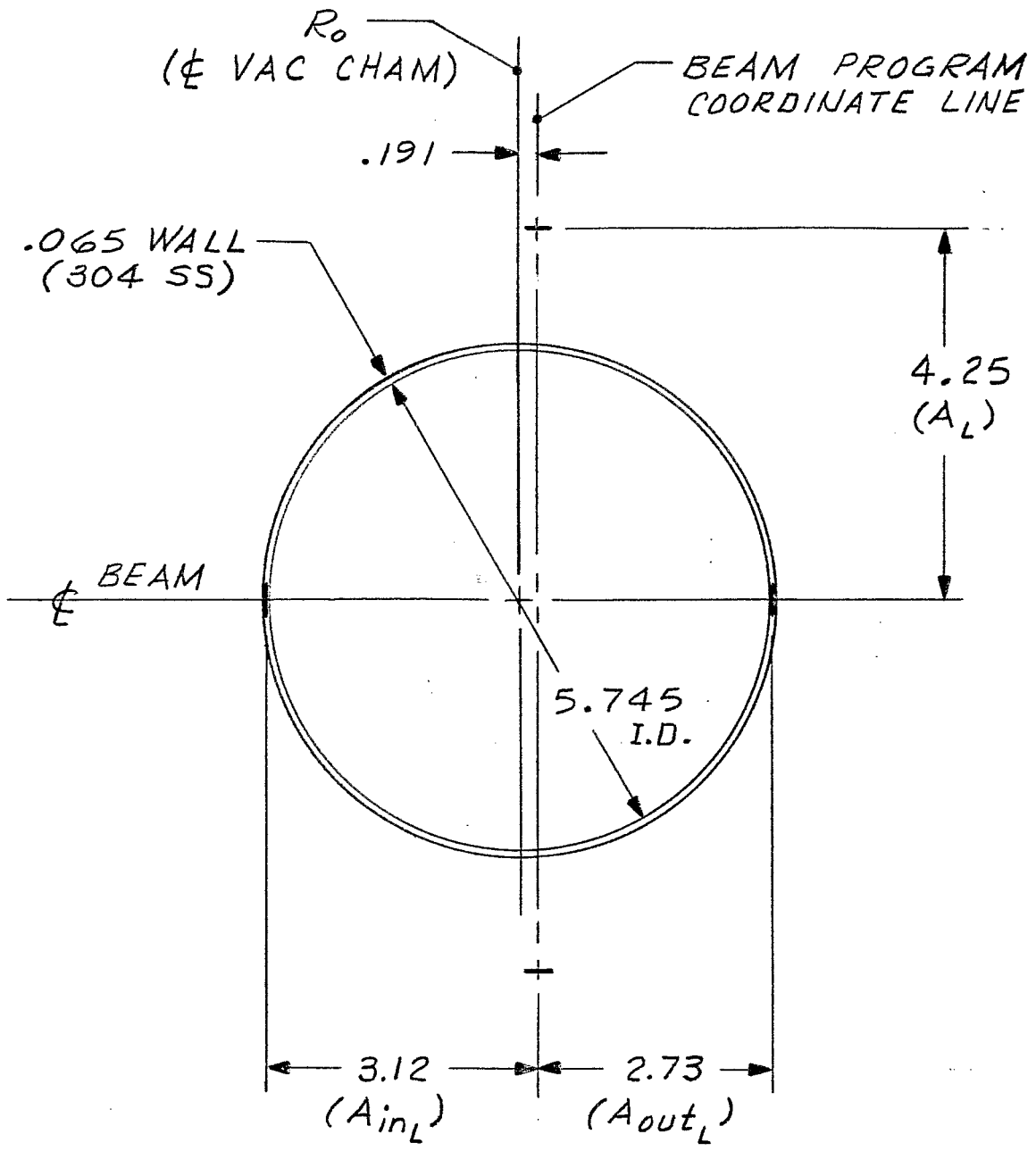

A13

REF DWG : D05-M-960-5

3-18-85

VIEW LOOKING DOWNSTREAM

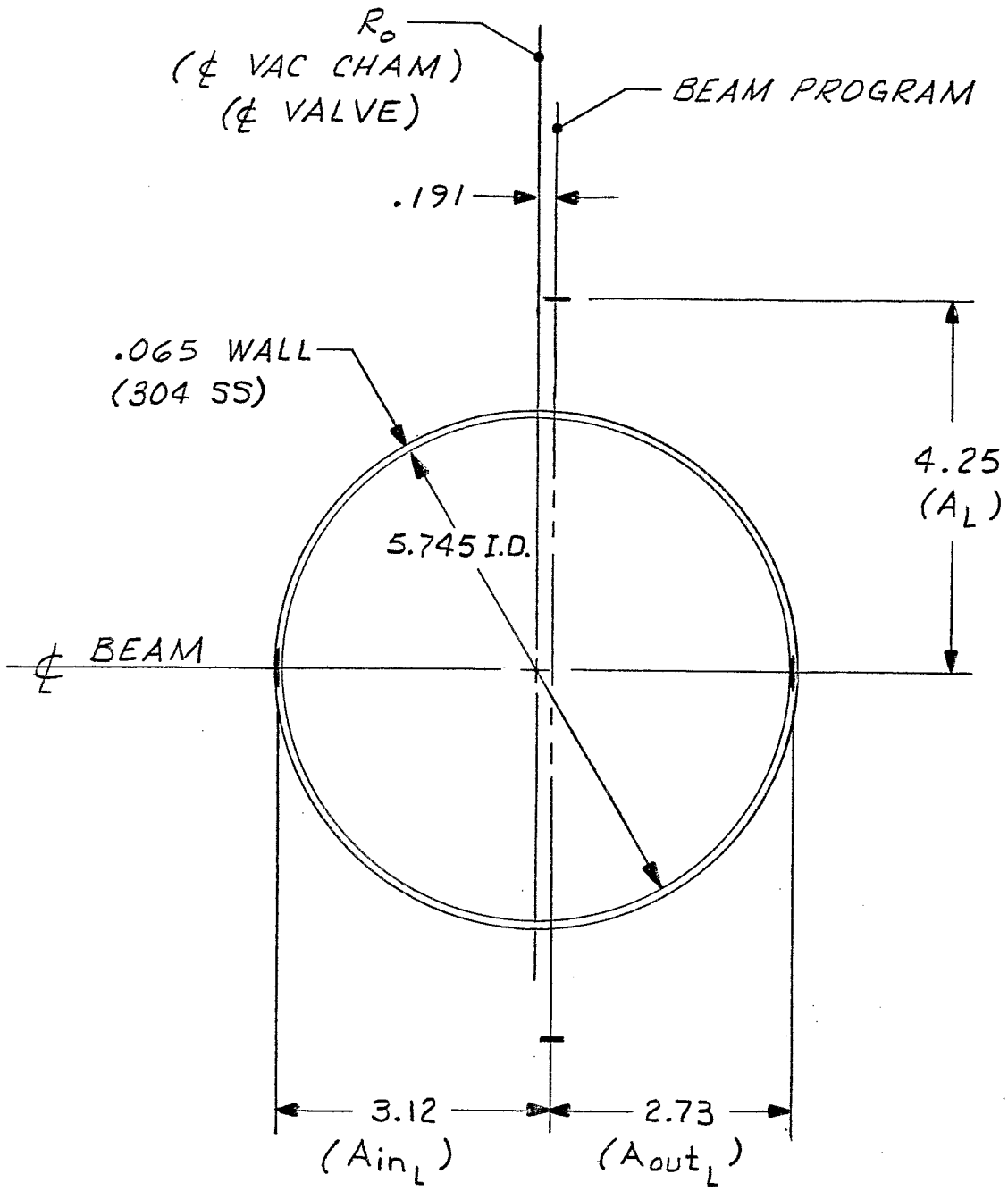

B13 THRU L13

REF DWGS: D05-M-959-4 & D05-M-962

3-20-85

VIEW LOOKING DOWNSTREAM

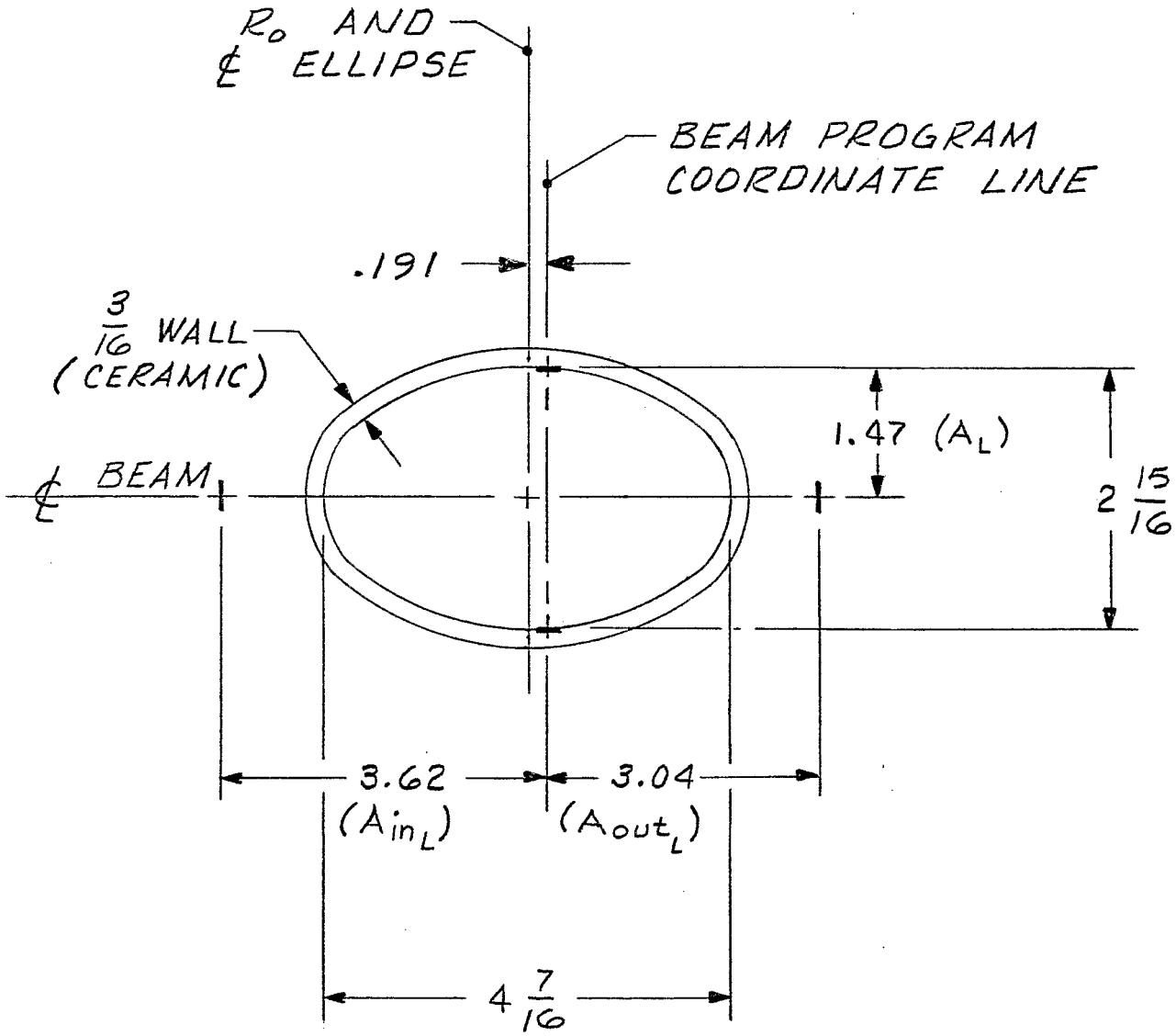

A15 THRU L15
FERRITE QUADS

REF DWGS: D05-M-2160-5 & D05-M-2170-4

VIEW LOOKING DOWNSTREAM

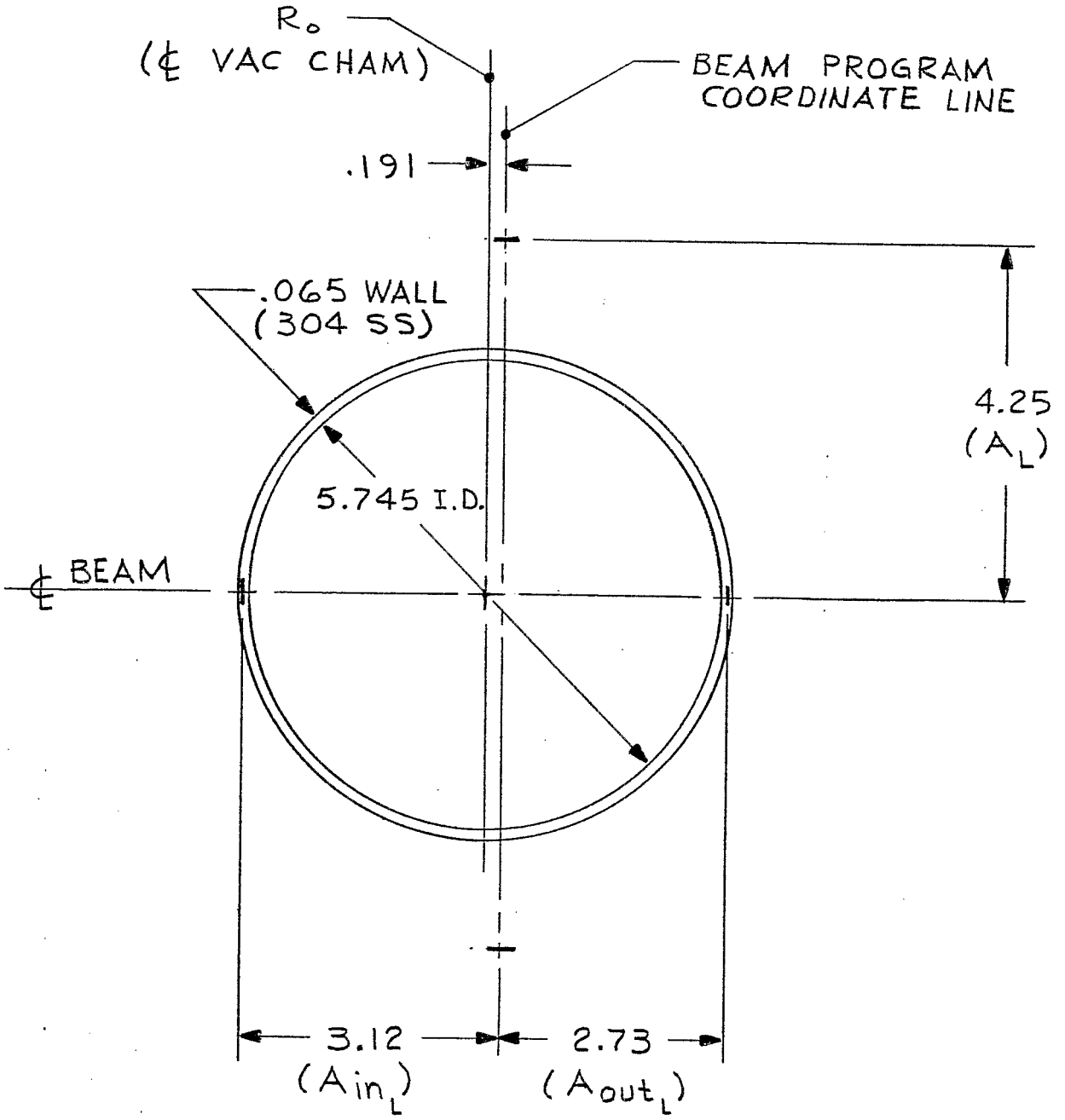

A17 THRU L17

REF DWGS: D05-M-960-5

SECTION THRU UPSTREAM END
VIEW LOOKING DOWNSTREAM

3-20-85

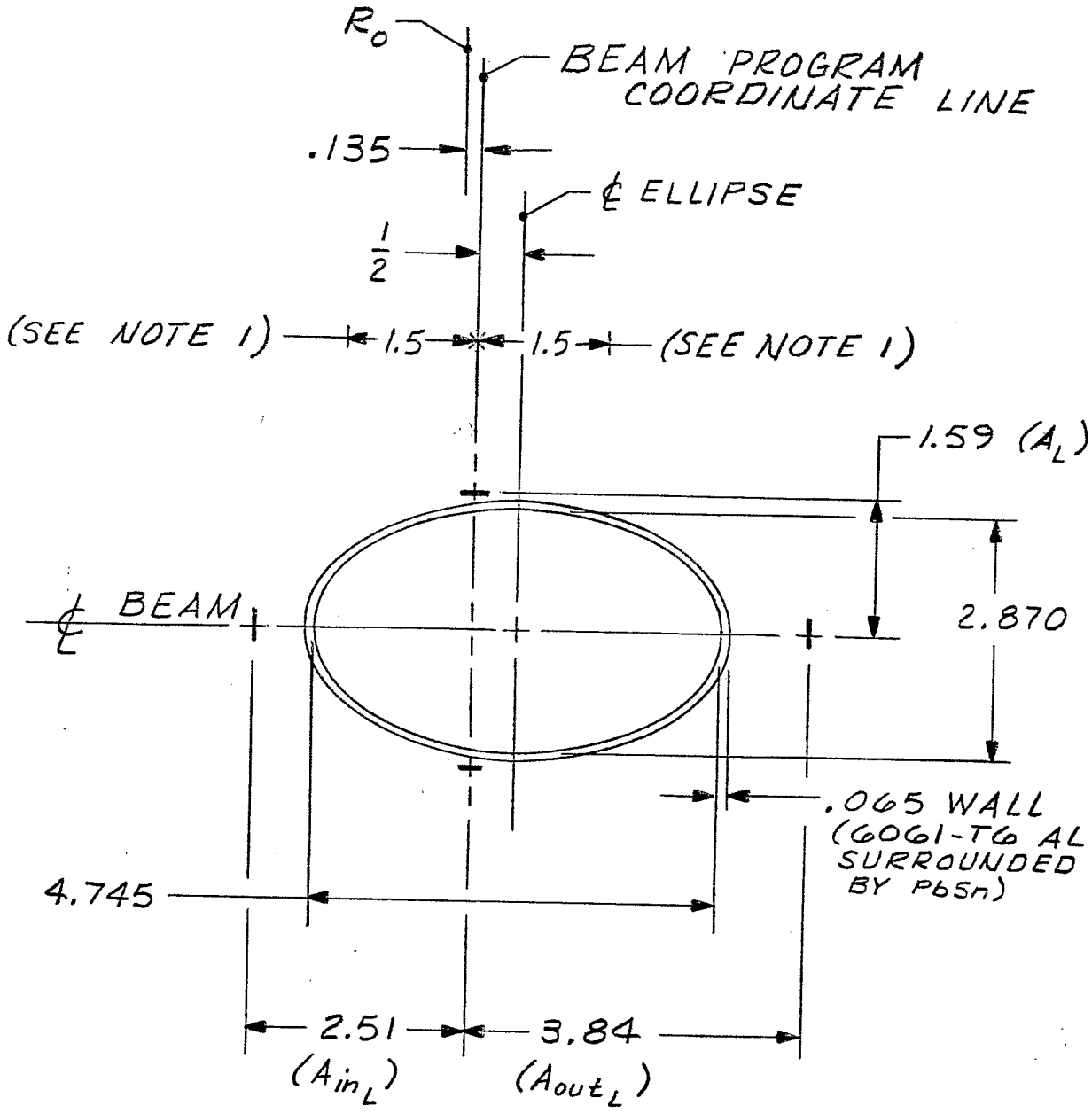

NOTE:

1. BEAM CATCHER SHOWN IN NOMINAL OPERATING POSITION. MOVEMENT IS ± 1.5". (LIMITING SWITCH HAS BEEN TEMPORARILY DISABLED)

E-20
BEAM CATCHER

REF DWGS: D08-M-124-5 & D08-M-118-5

SECTION THRU DOWNSTREAM END

VIEW LOOKING DOWNSTREAM

3-22-85

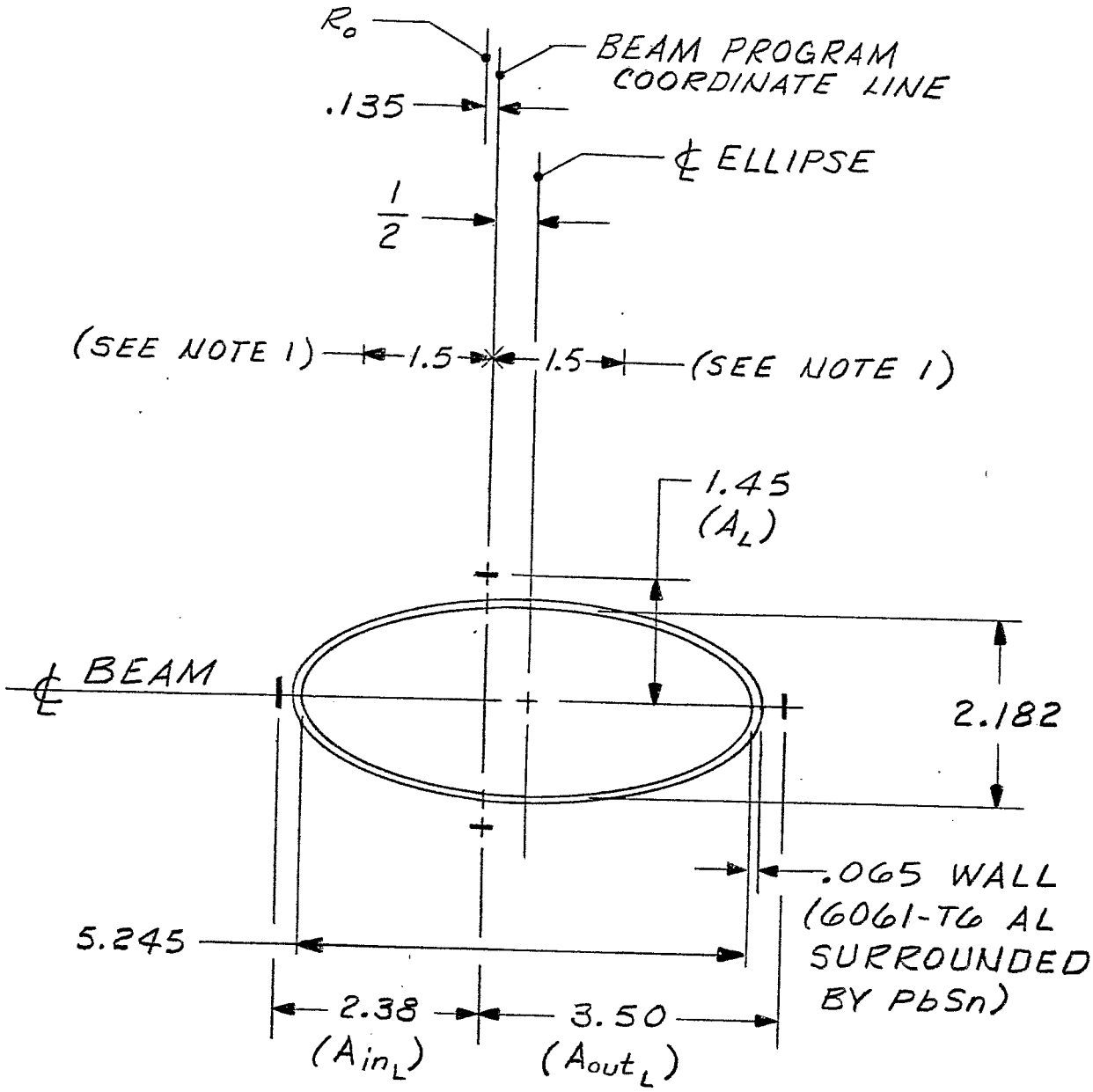

NOTES:

1. BEAM CATCHER SHOWN IN NOMINAL OPERATING POSITION. MOVEMENT IS ± 1.5. (LIMITING SWITCH HAS BEEN TEMPORARILY DISABLED)

E-20

BEAM CATCHER

REF DWGS: D08-M-124-5 & D08-M-118-5

4-5-85

VIEW LOOKING DOWNSTREAM

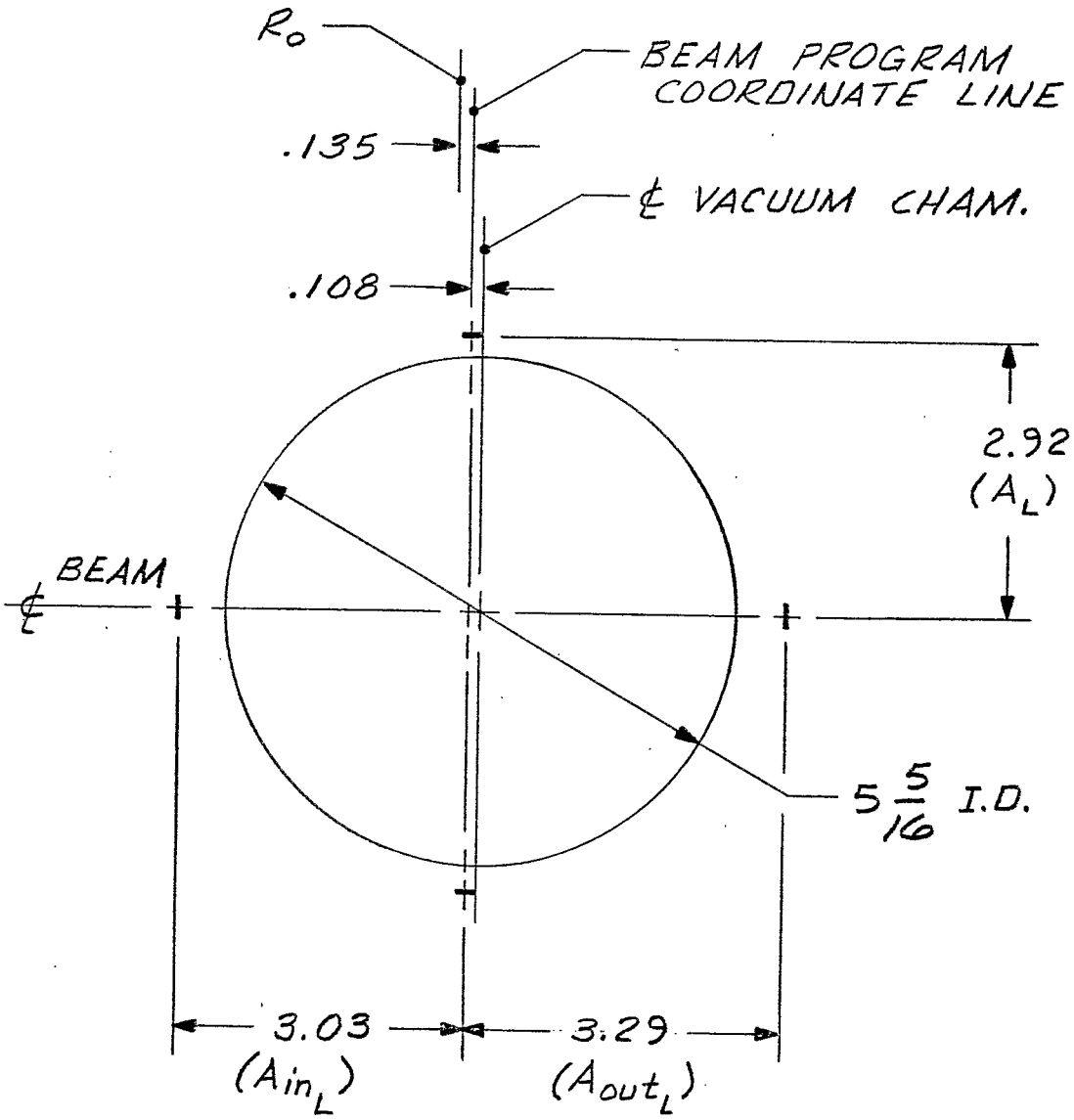

L20

BEAM CURRENT TRANSFORMER

REF DWGS: D09-M-372-5

4-5-85

VIEW LOOKING DOWNSTREAM

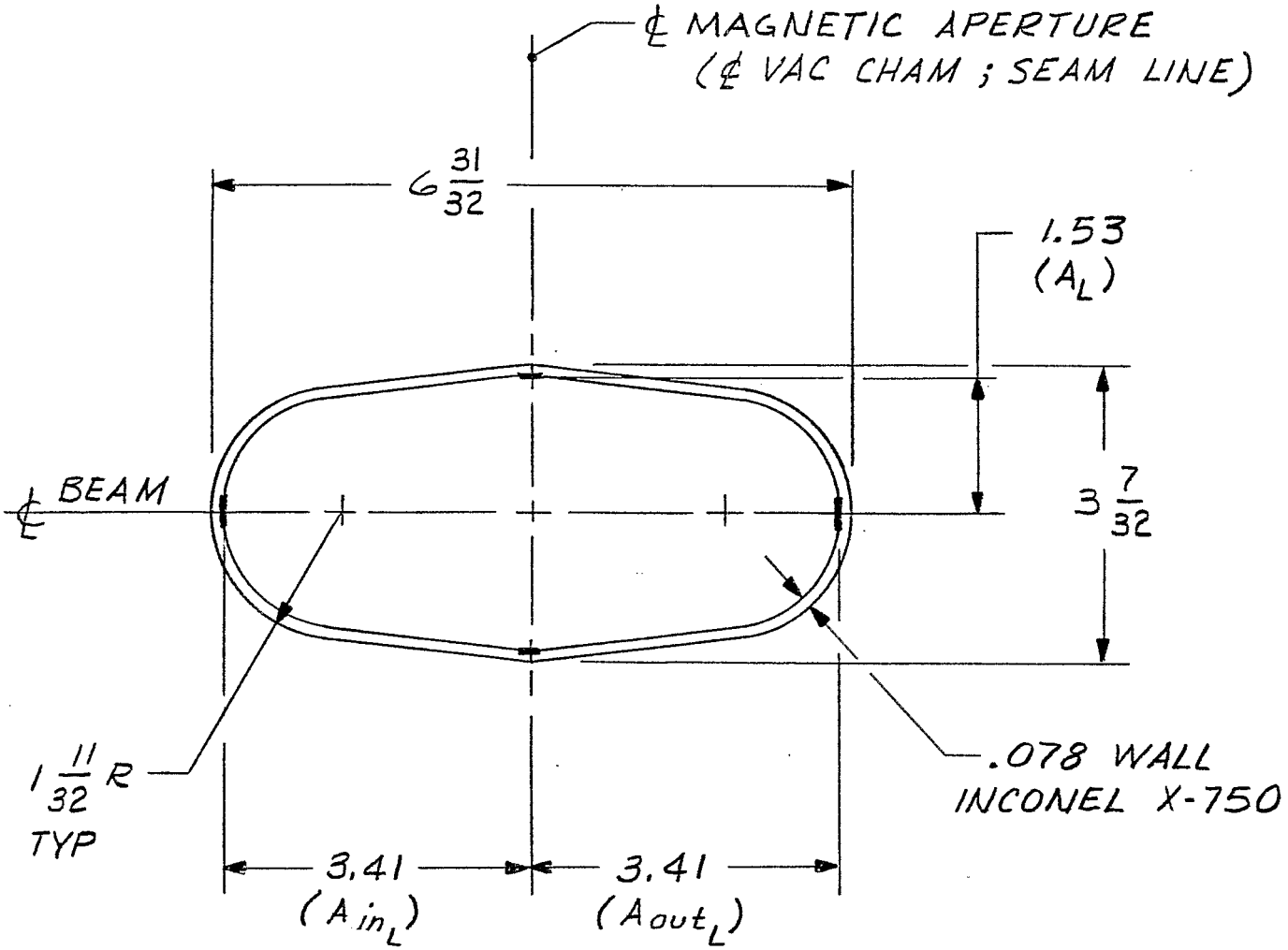

MAIN MAGNET VACUUM CHAMBER
TYPICAL SECTION

REF DWGS: D05-M-472-6

UPSTREAM FLANGE
VIEW LOOKING DOWNSTREAM

3-25-85

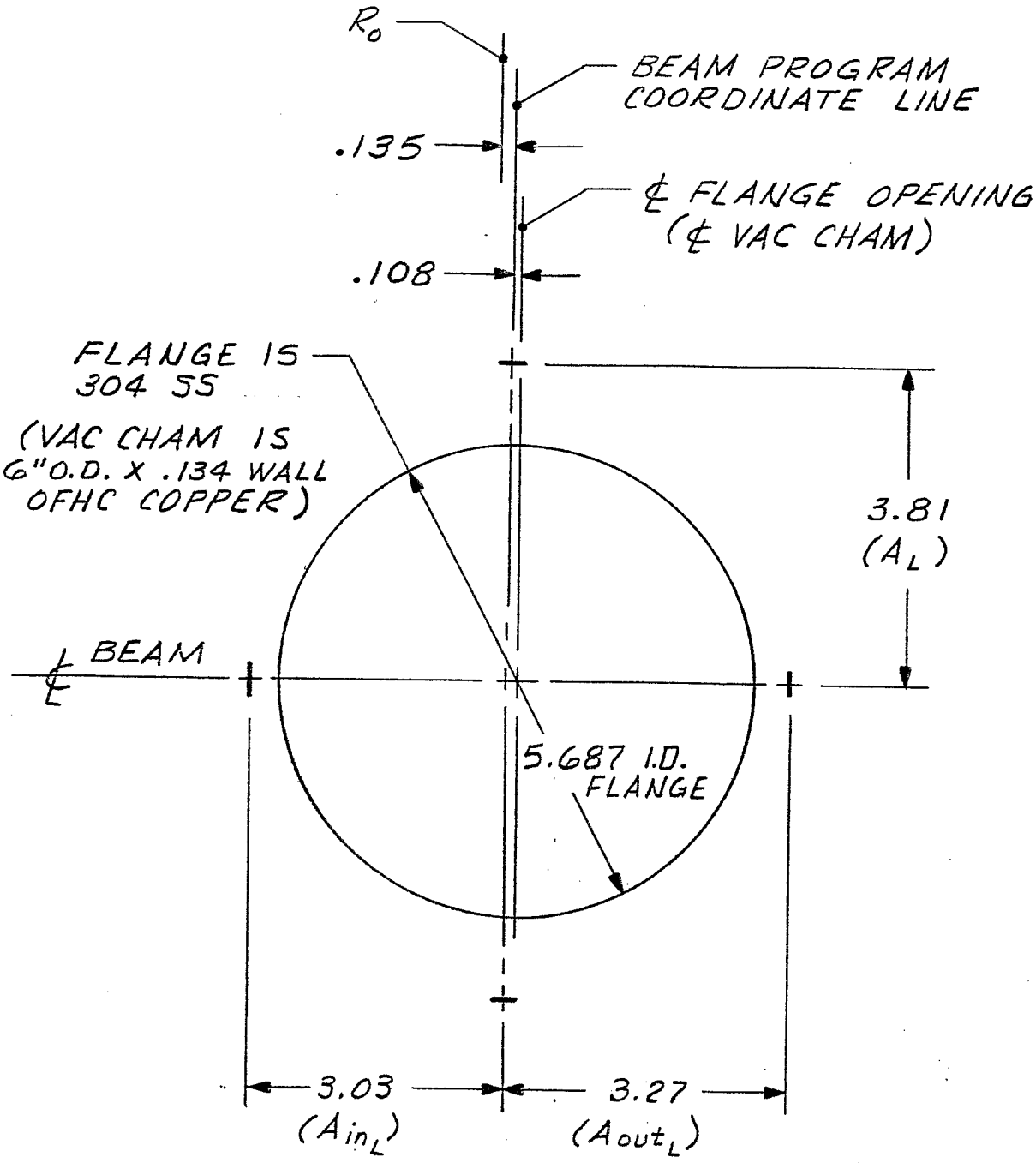

B10, C10, D10, J10, K10

RF CAVITIES

REF DWGS: D06-M-879-6 & D06-M-670-3

DOWNSTREAM FLANGE

VIEW LOOKING DOWNSTREAM

3-25-85

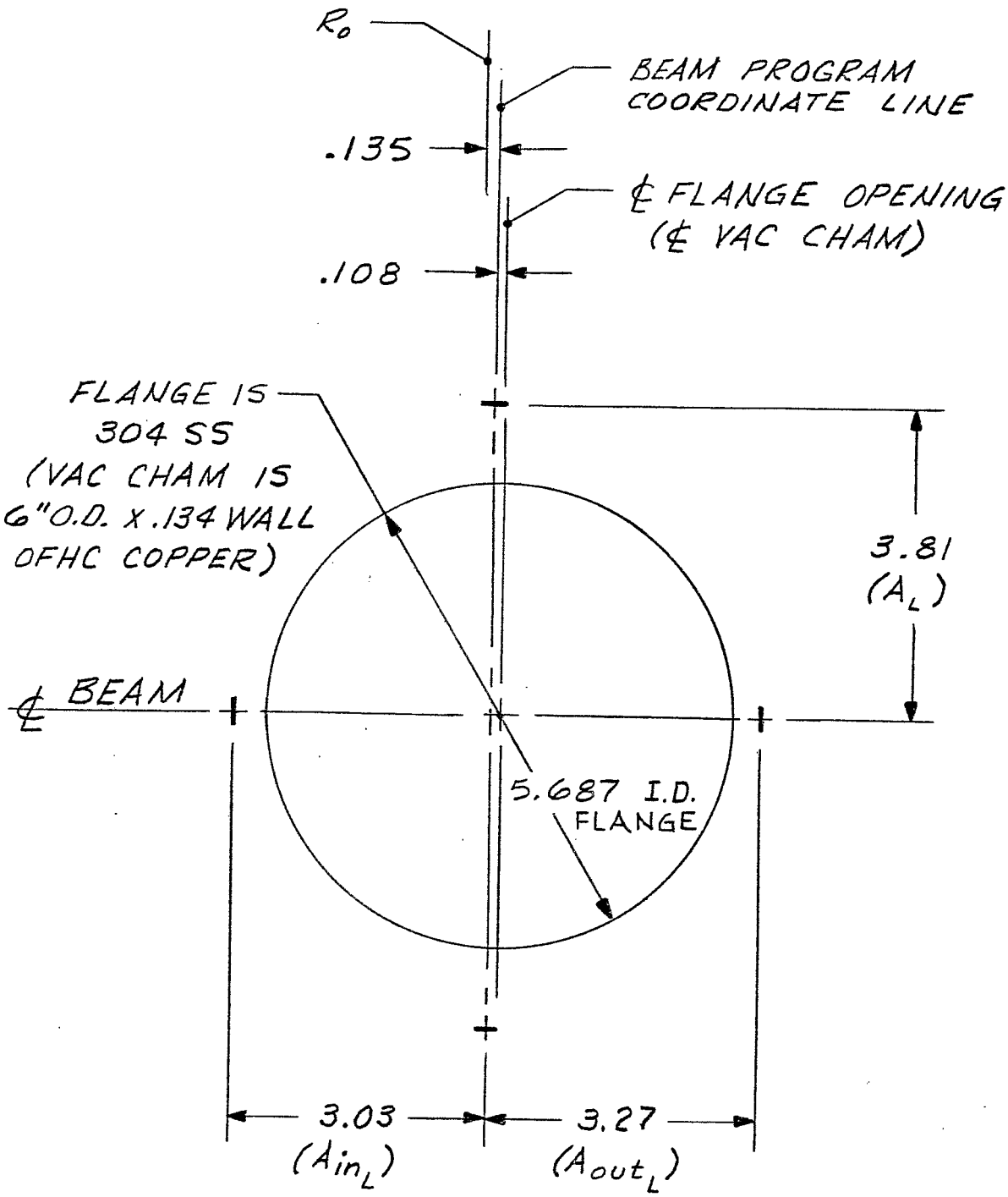

B20, C20, D20, I20, J20, K20

RF CAVITIES

REF DWGS: D06-M-879-6 & D06-M-669-3

SECTION THRU UPSTREAM END
VIEW LOOKING DOWNSTREAM

3-20-85

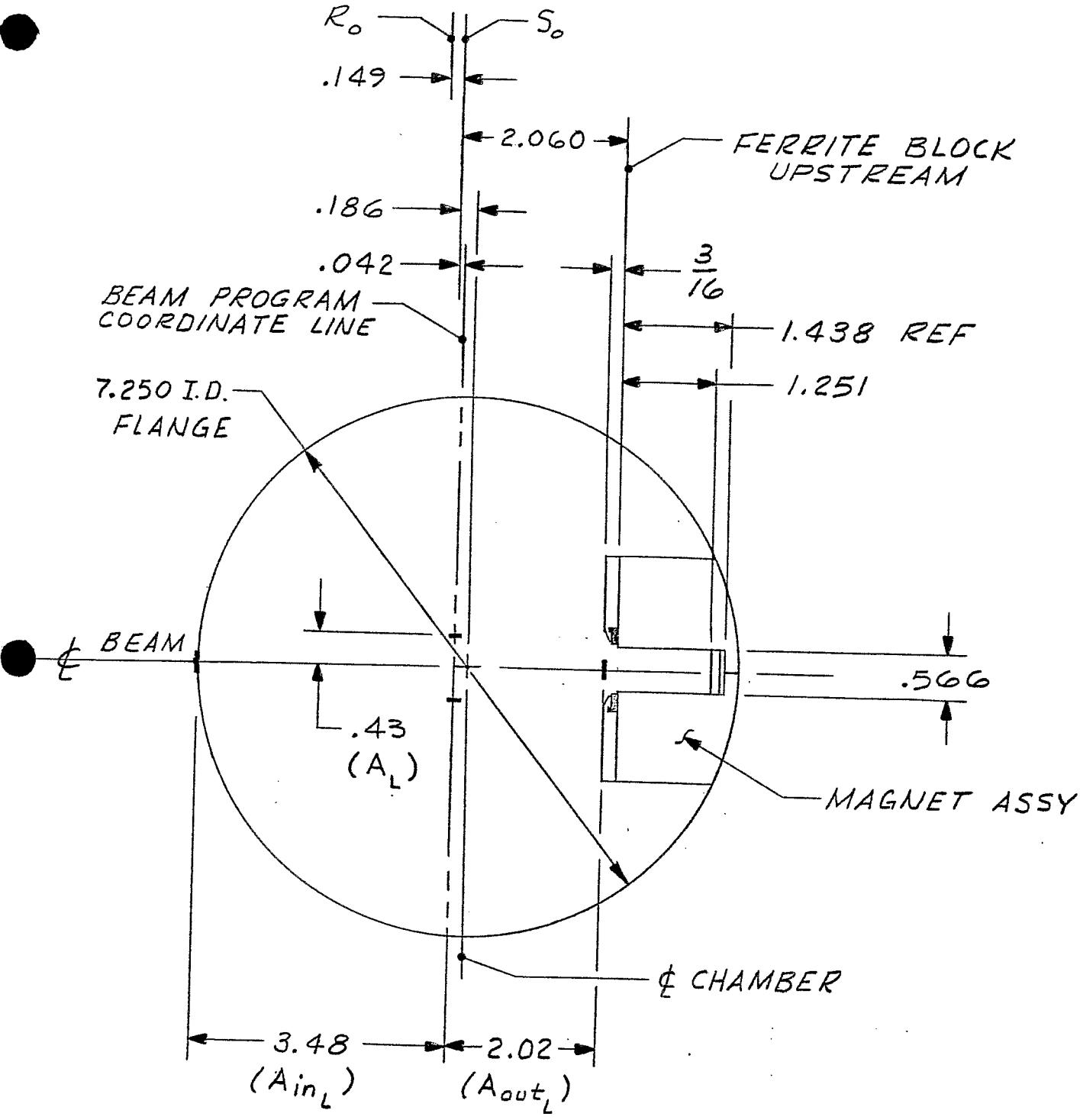

E5
CONVERTIBLE KICKER

REF DWGS: D11-M-11272-5, D11-M-11350-5 & D11-M-11271-5

SECTION THRU DOWNSTREAM END

VIEW LOOKING DOWNSTREAM

3-20-85

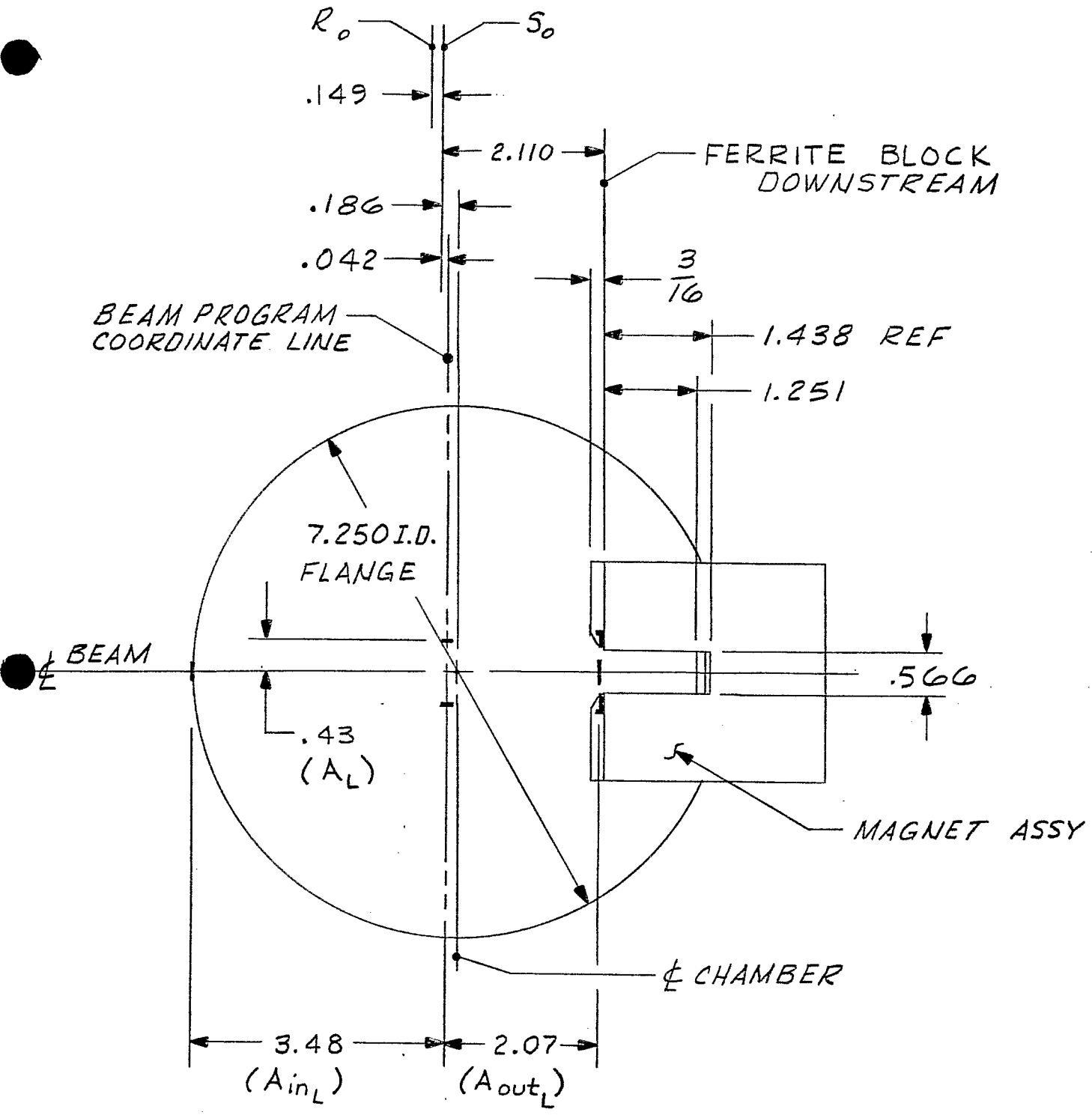

E5

CONVERTIBLE KICKER

REF DWGS: D11-M-11272-5, D11-M-11350-5 & D11-M-11271-5

3-20-85

SECTION THRU UPSTREAM END
VIEW LOOKING DOWNSTREAM

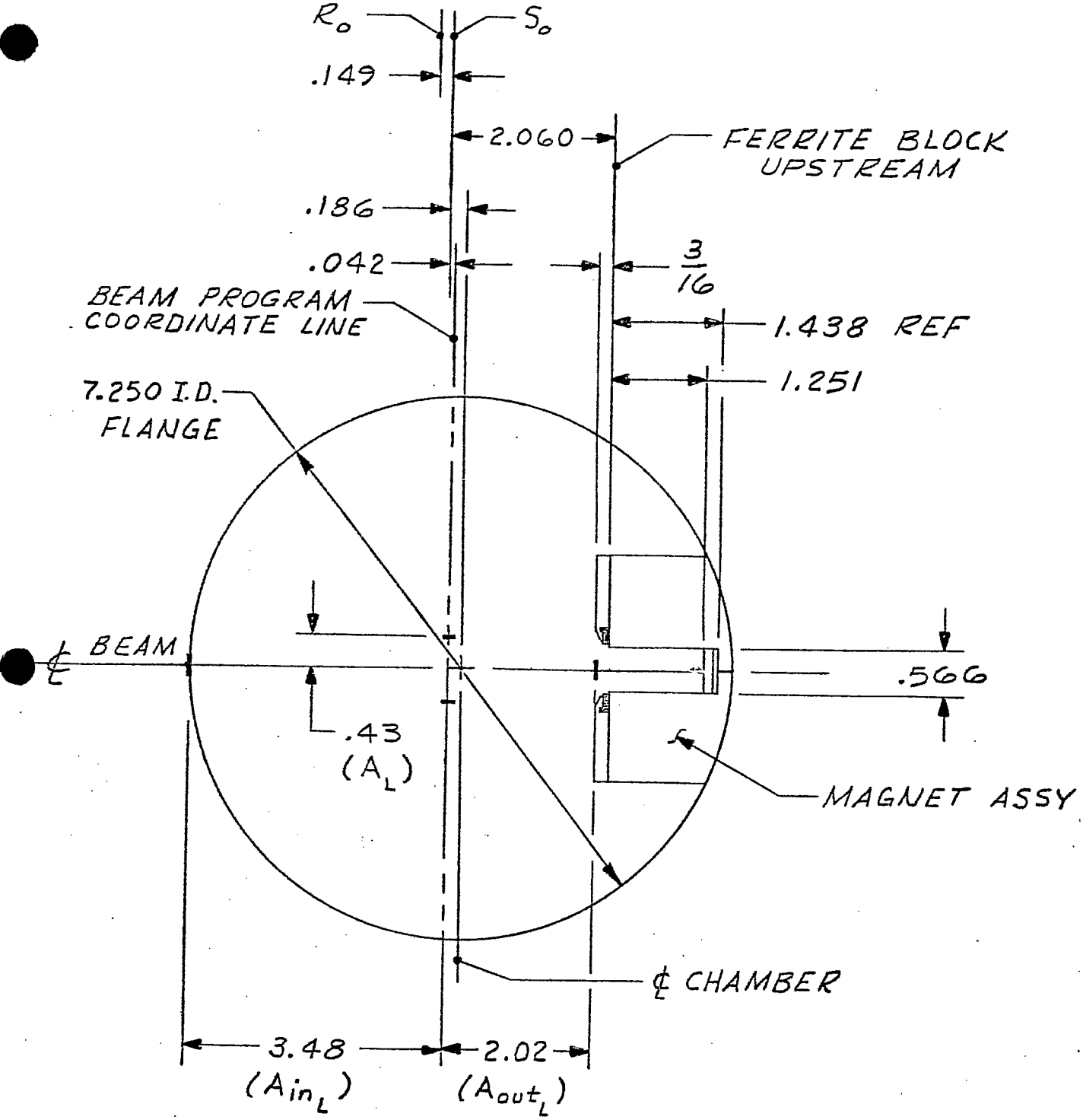

H5

CONVERTIBLE KICKER

REF DWGS: D11-M-11272-5, D11-M-11350-5 & D11-M-11271-5

SECTION THRU DOWNSTREAM END
VIEW LOOKING DOWNSTREAM

3-20-85

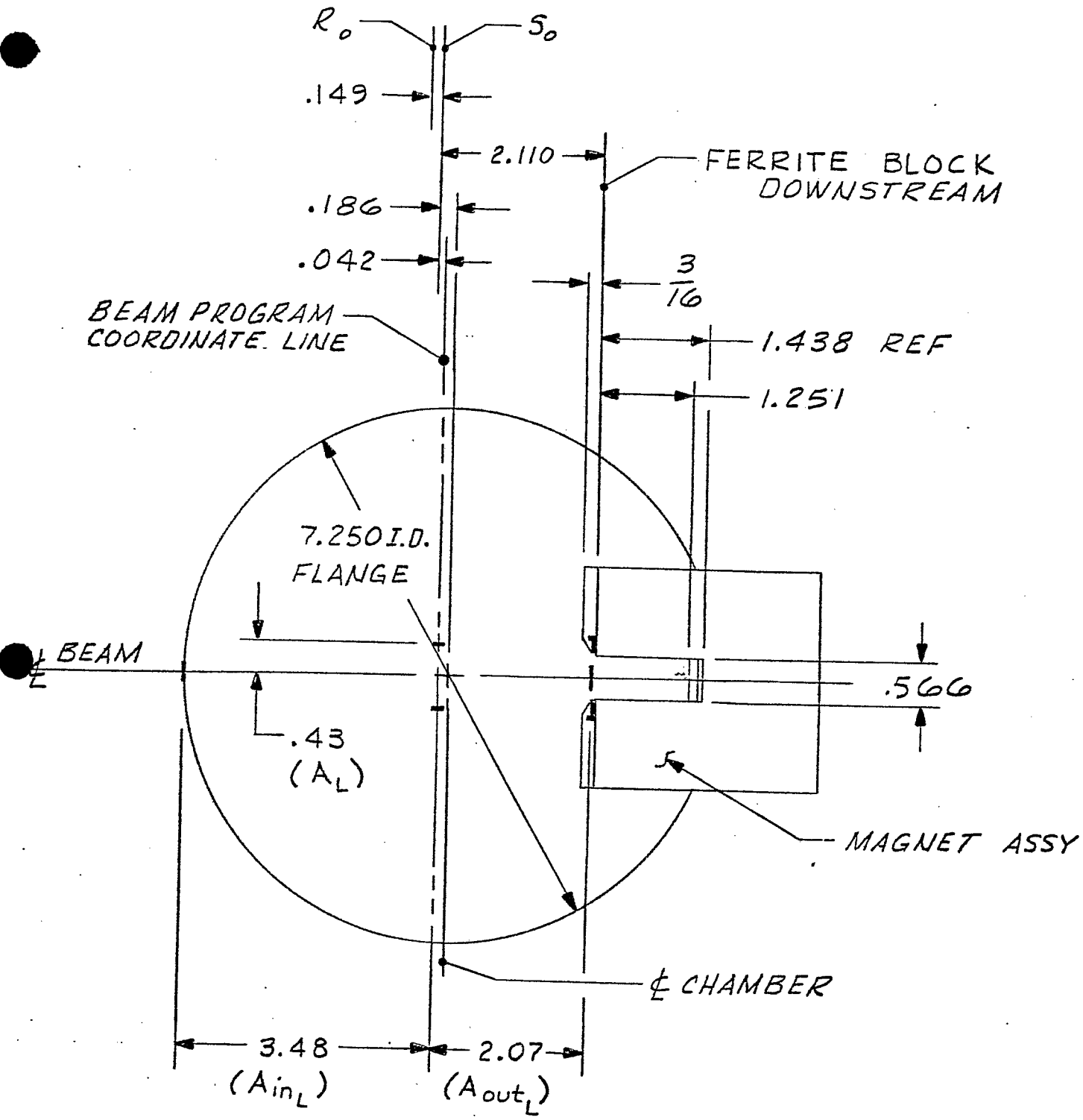

H5

CONVERTIBLE KICKER

REF DWGS: D11-M-11272-5, D11-M-11350-5 & D11-M-11271-5

3-21-85

VIEW LOOKING DOWNSTREAM

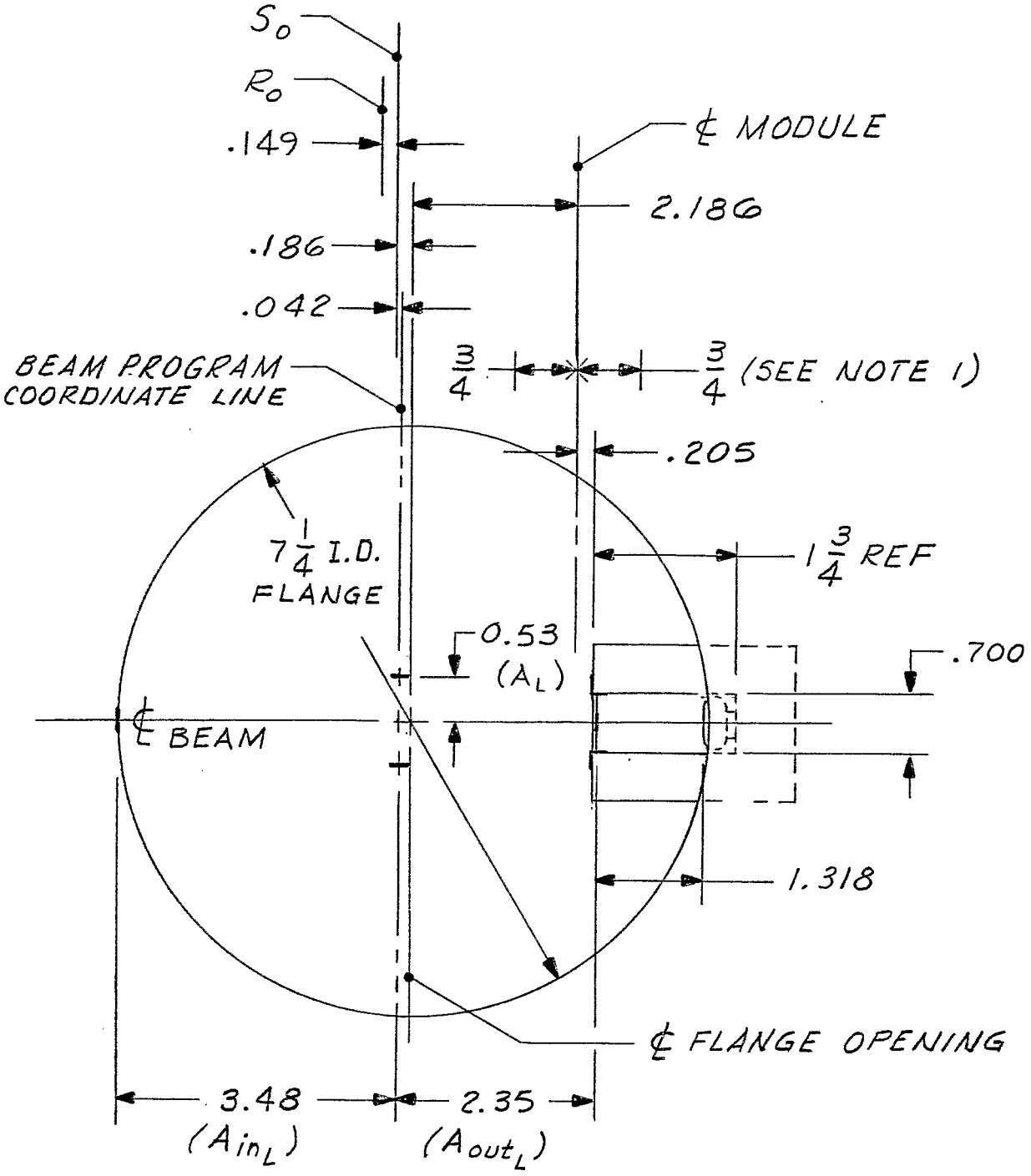

NOTES:

1. MAGNET SHOWN IN NOMINAL OPERATING POSITION. MOVEMENT IS ± 3/4"

F5

REF DWGS: D11-M-9313-5, D11-M-10909-4 & D11-M-9414-4

UPSTREAM END CORE #1

4-5-85

VIEW LOOKING DOWNSTREAM

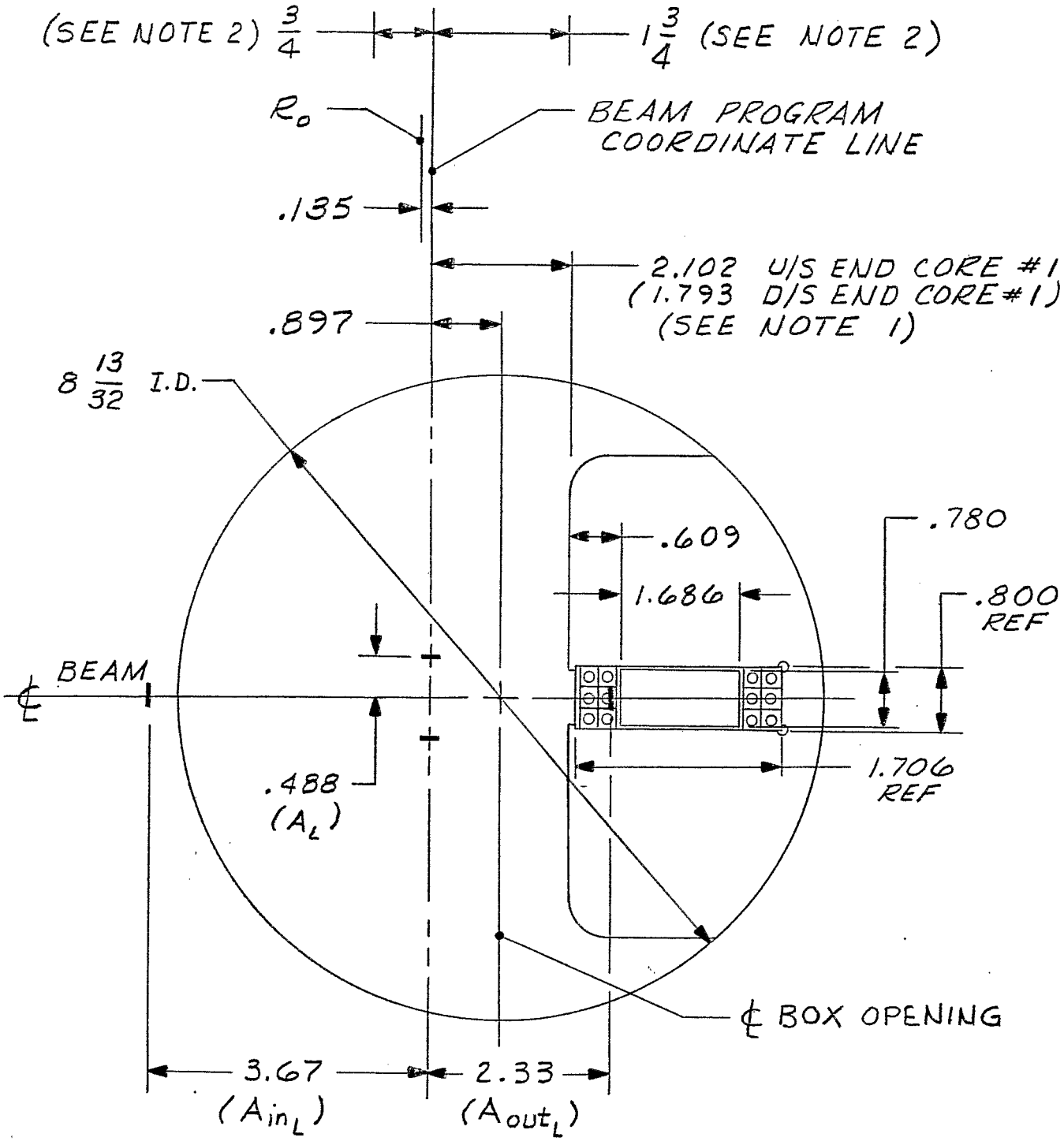

NOTES:

1. CORE #1 (D11-M-2339-5) IS LOCATED IN UPSTREAM END OF F-10 MAGNET ASSEMBLY.
2. MAGNET SHOWN IN NOMINAL OPERATING POSITION. MOVEMENT IS 3/4" TO BEAM; 1 3/4" FROM BEAM.

F10

REF DWGS: D11-M-8701-5 & D11-M-8711-5

DOWNSTREAM END CORE #1

4-5-85

VIEW LOOKING DOWNSTREAM

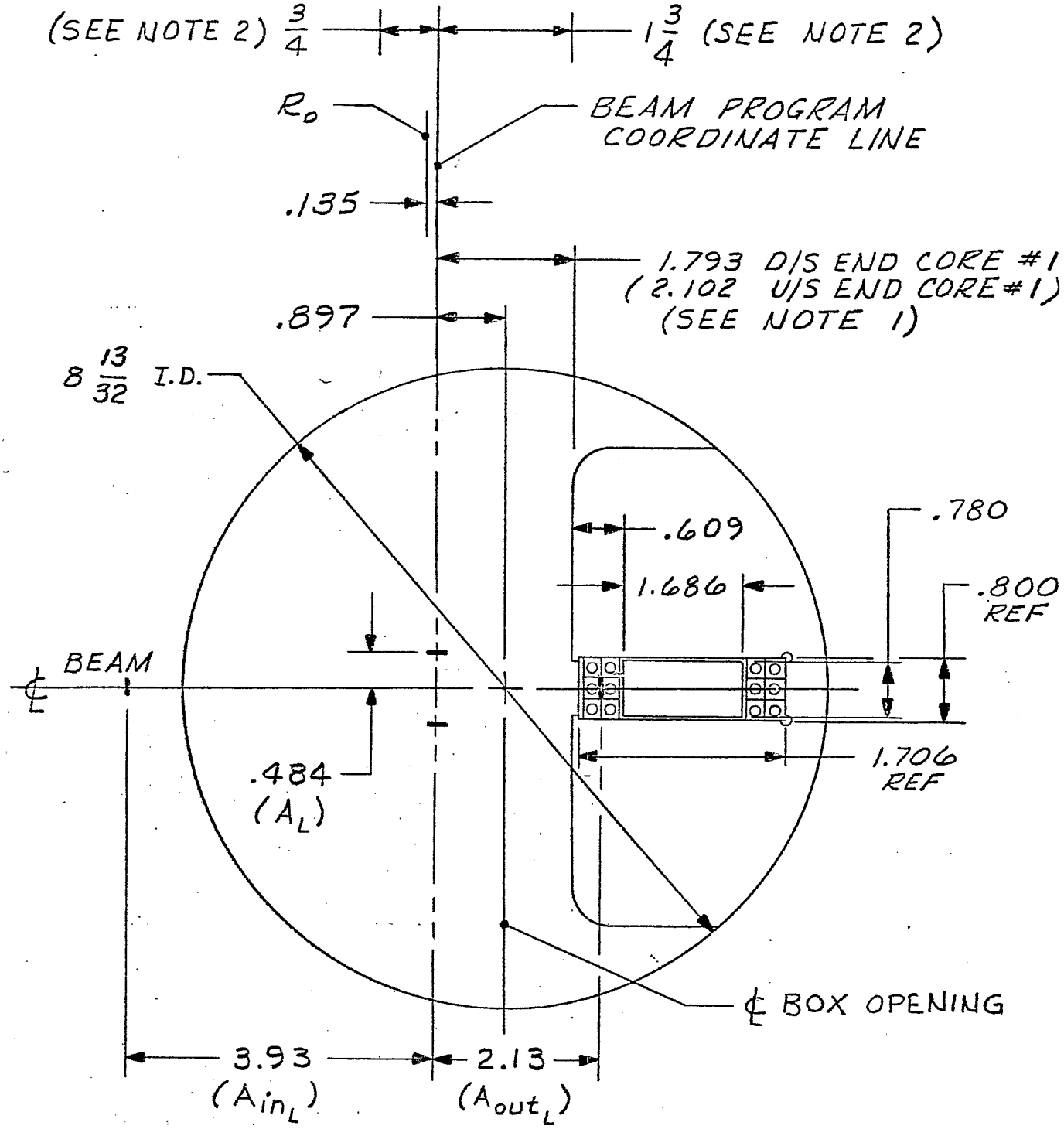

NOTES:

1. CORE #1 (D11-M-2339-5) IS LOCATED IN UPSTREAM END OF F-10 MAGNET ASSEMBLY.
2. MAGNET SHOWN IN NOMINAL OPERATING POSITION. MOVEMENT IS 3/4" TO BEAM; 1 3/4" FROM BEAM.

F10

REF DWGS: D11-M-8701-5 & D11-M-8711-5

DOWNSTREAM END CORE #2

4-5-85

VIEW LOOKING DOWNSTREAM

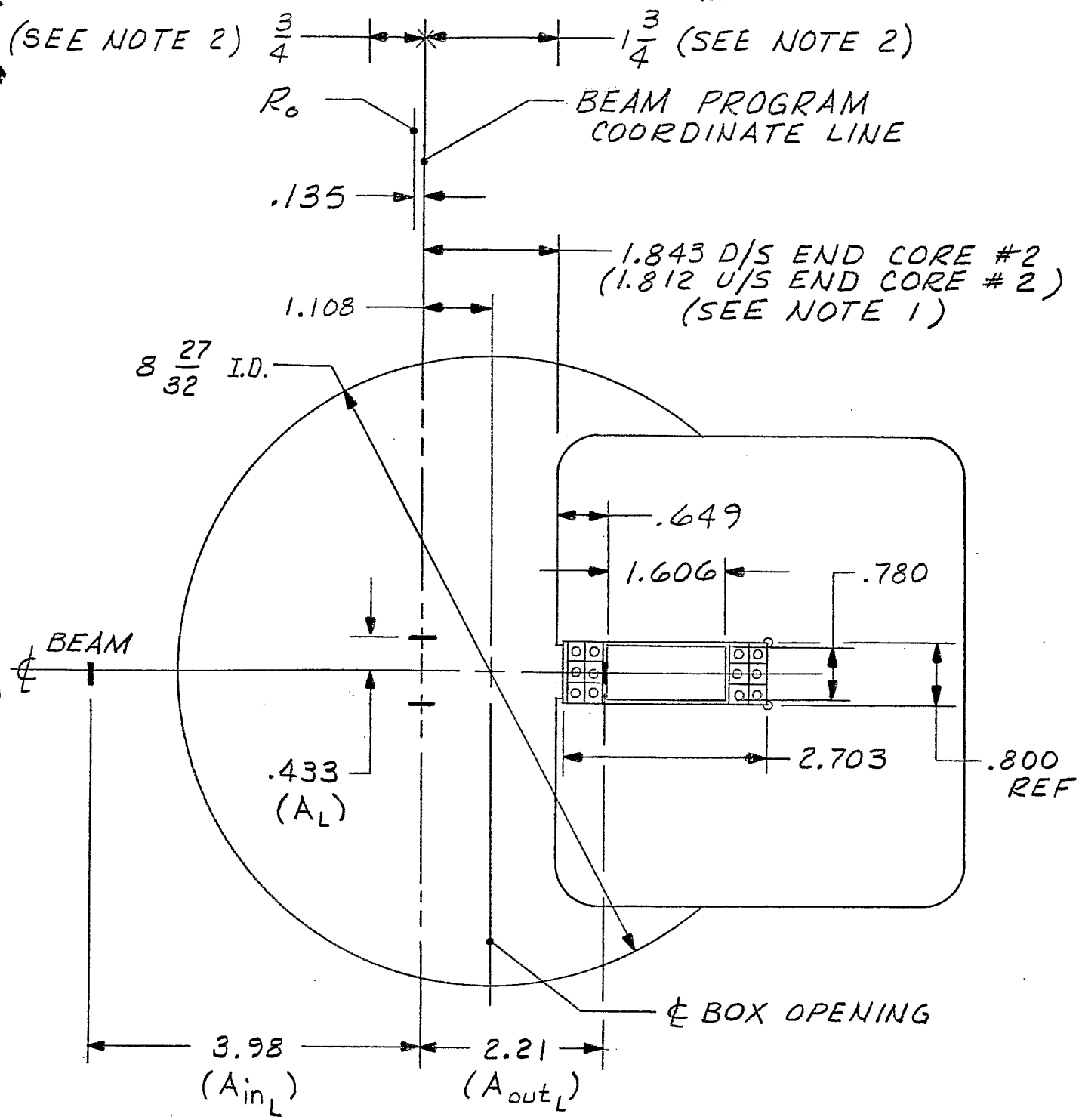

NOTES:

1. CORE #2 (D11-M-2338-5) IS LOCATED IN DOWNSTREAM END OF F-10 MAGNET ASSEMBLY.
2. MAGNET SHOWN IN NOMINAL OPERATING POSITION. MOVEMENT IS 3/4" TO BEAM; 1 3/4" FROM BEAM.

F10

REF DWGS: D11-M-8701-5 & D11-M-8711-5

SECTION THRU UPSTREAM END
VIEW LOOKING DOWNSTREAM

4-5-85

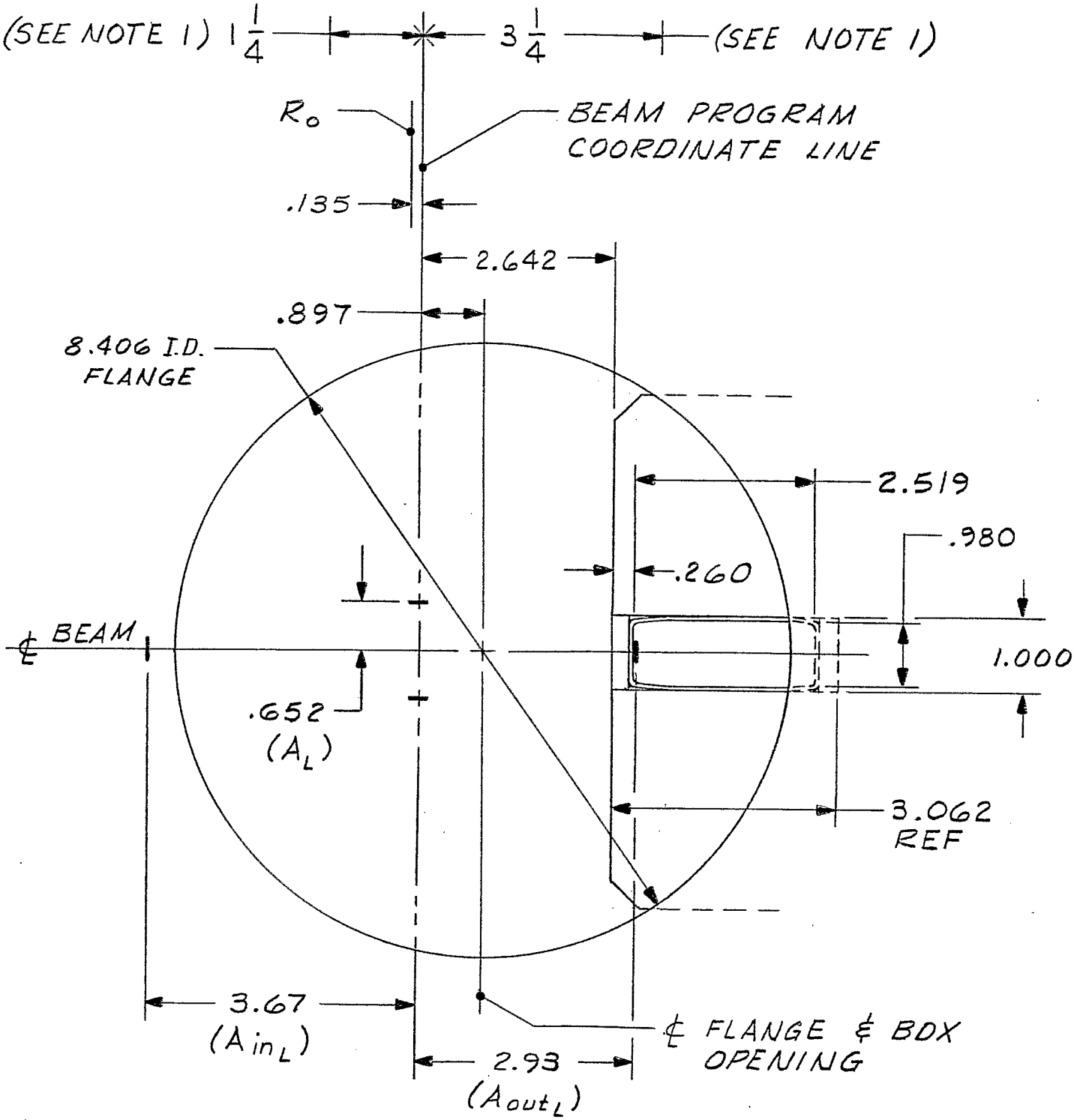

NOTE:

1. MAGNET SHOWN IN NOMINAL OPERATING POSITION. MOVEMENT IS 1 1/4" TO BEAM; 3 1/4" FROM BEAM.

H10

REF DWGS: D11-M-6959-4 & D11-M-11230-5

SECTION THRU DOWNSTREAM END
VIEW LOOKING DOWNSTREAM

4-5-85

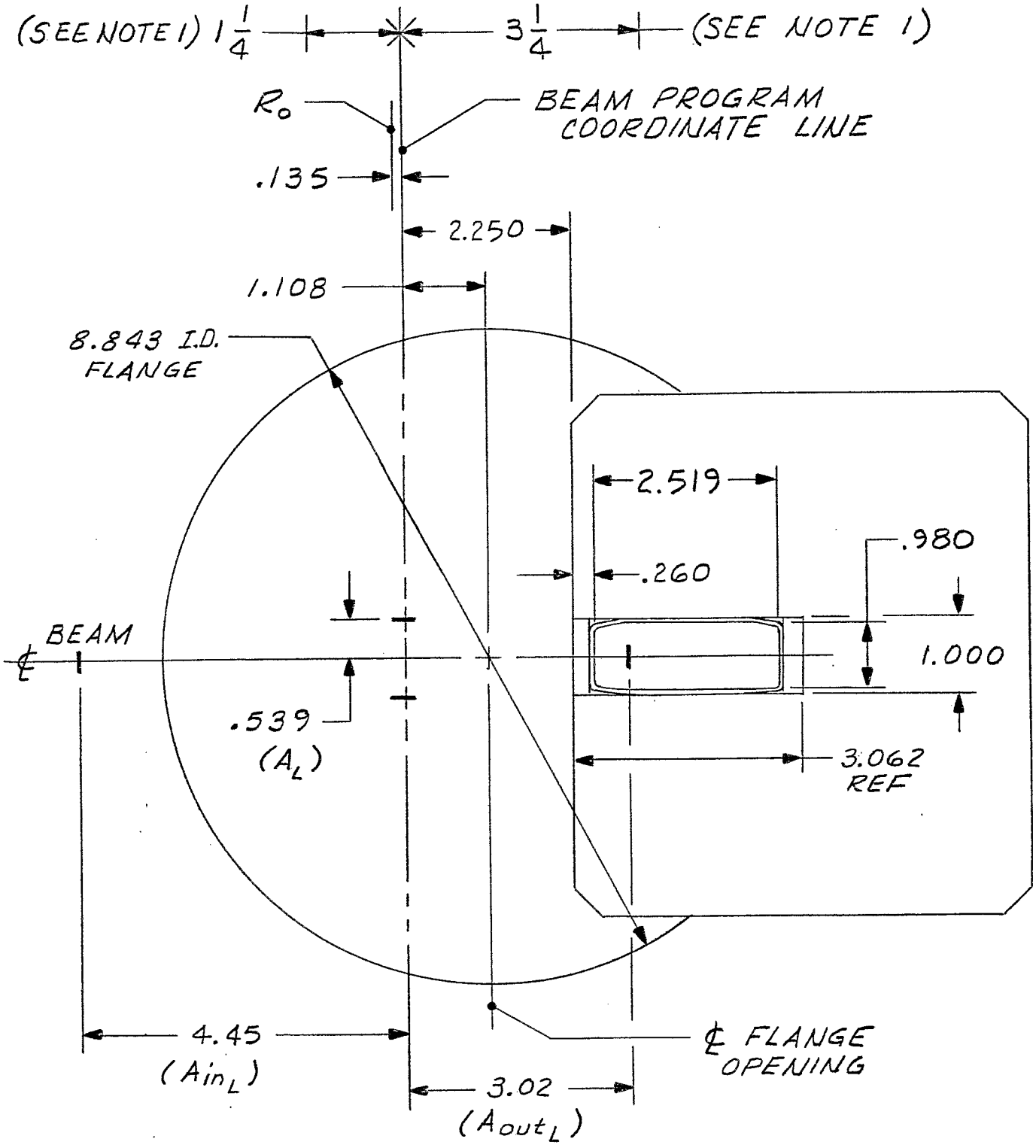

NOTE:

1. MAGNET SHOWN IN NOMINAL OPERATING POSITION. MOVEMENT IS 1 1/4" TO BEAM; 3 1/4" FROM BEAM.

HIO

REF DWGS: D11-M-6959-4 & D11-M-11230-5