BNL-104592-2014-TECH

AGS/AD/Tech Note No. 164;BNL-104592-2014-IR

DATACON, THE AGS COMPUTER CONTROL SYSTEM

J. A. Curtiss

May 1980

Collider Accelerator Department

Brookhaven National Laboratory

U.S. Department of Energy

USDOE Office of Science (SC)

Notice: This technical note has been authored by employees of Brookhaven Science Associates, LLC under Contract No.DE-AC02-76CH00016 with the U.S. Department of Energy. The publisher by accepting the technical note for publication acknowledges that the United States Government retains a non-exclusive, paid-up, irrevocable, world-wide license to publish or reproduce the published form of this technical note, or allow others to do so, for United States Government purposes.

DISCLAIMER

This report was prepared as an account of work sponsored by an agency of the United States Government. Neither the United States Government nor any agency thereof, nor any of their employees, nor any of their contractors, subcontractors, or their employees, makes any warranty, express or implied, or assumes any legal liability or responsibility for the accuracy, completeness, or any third party's use or the results of such use of any information, apparatus, product, or process disclosed, or represents that its use would not infringe privately owned rights. Reference herein to any specific commercial product, process, or service by trade name, trademark, manufacturer, or otherwise, does not necessarily constitute or imply its endorsement, recommendation, or favoring by the United States Government or any agency thereof or its contractors or subcontractors. The views and opinions of authors expressed herein do not necessarily state or reflect those of the United States Government or any agency thereof.

Accelerator Department
BROOKHAVEN NATIONAL LABORATORY
Associated Universities, Inc.
Upton, New York 11973

AGS DIVISION TECHNICAL NOTE

No. 164

DATACON, THE AGS COMPUTER CONTROL SYSTEM

J. Curtiss

May 16, 1980

Datacon is the system by which AGS equipment may be interfaced to our computers, and which enables extension of data gathering and control capability by means of a single coaxial cable.

A videotape lecture introducing DATACON was made part of the AGS tape library. This Tech Note provides supporting "hard copy" for the instructional videotape.

Distr: Department Admin.
AGS Division EE's
J. Post and Group
S. Wingard and Group

COMPUTER I/O
SINGLE WIRE

DATACON
DATACON2

NUMBER SYSTEMS

SYMBOL & POSITION

DECIMAL	10^n
BINARY	2^n
OCTAL	8^n
HEXIDECIMAL	16^n

DECIMAL	BINARY	OCTAL
0	0	0
1	1	1
2	10	2
3	11	3
4	100	4
5	101	5
6	110	6
7	111	7
8	1000	10
9	1001	11
10	1010	12
11	1011	13
12	1100	14
13	1101	15
14	1110	16
15	1111	17
16	10000	20
17	10001	21
18	10010	22

NUMBER SYSTEMS

SYMBOL AND POSITION

DECIMAL	BINARY	OCTAL
0	0	0
1	1	1
2	10	2
3	11	3
4	100	4
5	101	5
6	110	6
7	111	7
8	1000	10
9	1001	11
10	1010	12
11	1011	13
12	1100	14
13	1101	15
14	1110	16
15	1111	17
16	10000	20
17	10001	21
18	10010	22
19	10011	23
20	10100	24
21	10101	25
95	1011111	137
96	1100000	140
97	1100001	141
98	1100010	142
99	1100011	143
100	1100100	144
101	1100101	145
102	1100110	146
103	1100111	147
104	1101000	150

100 10 1 $= 10^n$

64 32 16 8 4 2 1 $= 2^n$

512 64 8 1 $= 8^n$

J. CURTISS
3/77

A/D CONVERTERS

BINARY

OFFSET BINARY

2's COMPLEMENT

BINARY-CODED DEC.

	BINARY	OFFSET BINARY	TWO'S COMPLEMENT
FS	111	111	011
	110		
	101	110	010
	100		
	011		
	010	101	001
0^+	001		
0	000	100	000
0^-			
		011	111
		010	110
		001	101
-FS		000	100

n	2^n	2^{-n}	dB
0	1	1	0
1	2	.5	−6
2	4	.25	−12
3	8	.125	−18.1
4	16	.0625	−24.1
5	32	.03125	−30.1
6	64	.015625	−36.1
7	128	.0078125	−42.1
8	256	.00390625	−48.2
9	512	.001953125	−54.2
10	1 024	.0009765625	−60.2
11	2 048	.00048828125	−66.2
12	4 096	.000244140625	−72.2
13	8 192	.0001220703125	−78.3
14	16 384	.00006103515625	−84.3
15	32 768	.000030517578125	−90.3
16	65 536	.0000152587890625	−96.3

TABLE 1. Decimal Equivalents of 2^n and 2^{-n}

No. of Bits n	LSB	10V Full Scale All 1's (Volts)	A/D Transitions To LSB (1/2 LSB)	A/D Transitions To All 1's (Volts)
1	5V	5.0	2.5V	2.5
2	2.5V	7.5	1.25V	6.25
3	1.25V	8.75	625mV	8.13
4	625mV	9.38	312mV	9.07
5	312mV	9.69	156mV	9.53
6	156mV	9.84	78.1mV	9.76
7	78.1mV	9.92	39.1mV	9.88
8	39.1mV	9.961	19.5mV	9.941
9	19.5mV	9.980	9.77mV	9.970
10	9.77mV	9.990	4.88mV	9.985
11	4.88mV	9.9951	2.44mV	9.9927
12	2.44mV	9.9976	1.22mV	9.9964
13	1.22mV	9.9988	610μV	9.9982
14	610μV	9.9994	305μV	9.9991

STRAIGHT BINARY (UNIPOLAR)

+ FULL SCALE −1 LSB	111111111111
+ 3/4 FULL SCALE	110000000000
+ 1/2 FULL SCALE	100000000000
ZERO +1 LSB	000000000001
ZERO	000000000000

OFFSET BINARY (BIPOLAR)

+ FULL SCALE −1 LSB	111111111111
+ 3/4 FULL SCALE	111000000000
+ 1/2 FULL SCALE	110000000000
ZERO	100000000000
− 1/2 FULL SCALE	010000000000
− 3/4 FULL SCALE	001000000000
− FULL SCALE +1 LSB	000000000001
− FULL SCALE	000000000000

TWO'S COMPLEMENT (BIPOLAR)

+ FULL SCALE −1 LSB	011111111111
+ 3/4 FULL SCALE	011000000000
+ 1/2 FULL SCALE	010000000000
ZERO	000000000000
− 1/2 FULL SCALE	110000000000
− 3/4 FULL SCALE	101000000000
− FULL SCALE +1 LSB	100000000001
− FULL SCALE	100000000000

CODING FOR ADC-L SERIES CONVERTERS

Analog Input Range (0 to +10V, FS)	Straight Binary
+9.9975	111111111111
+8.7500	111000000000
+7.5000	110000000000
+5.0000	100000000000
+2.5000	010000000000
+1.2500	001000000000
0.0000	000000000000

Analog Input Range (± 10V, FS)	Offset Binary	2's Complement
+ 9.995	111111111111	011111111111
+ 8.750	111100000000	011100000000
+ 7.500	111000000000	011000000000
+ 5.000	110000000000	010000000000
0.000	100000000000	000000000000
− 5.000	010000000000	110000000000
− 7.500	001000000000	101000000000
− 8.750	000100000000	100100000000
− 9.995	000000000001	100000000001
−10.000	000000000000	100000000000

CODING FOR ADC-D AND K SERIES

Analog Input Range ±5V, FS	Offset Binary	2's Complement
+4.9975	111111111111	011111111111
+4.3750	111100000000	011100000000
+3.7500	111000000000	011000000000
+2.5000	110000000000	010000000000
0.0000	100000000000	000000000000
−2.5000	010000000000	110000000000
−3.7500	001000000000	101000000000
−4.3750	000100000000	100100000000
−4.9975	000000000001	100000000001
−5.0000	000000000000	100000000000

J. Curtiss 3/77

DATCON MAGNITUDE READOUT

VOLTAGE	0 to +5V	0 to +10V	±10V
+10		4095	2047
+5	4095	2047	
0+	0001	0001	0001
0	0000	0000	0000
0−			4095
−5			
−10			2048

w/ ±10 VOLTS, 2047 "COUNTS" per 10 VOLTS = 204.7 "COUNTS" per VOLT

CALIBRATION AS REPORTED TO MCR:

DEVICE POSITION	BENCH/FIELD DATA	CALCULATIONS	FORWARDED TO MCR	
RETRACT	9.233 VOLTS	(9.233)(204.7) = 1889.995	RETRACT	1890
℄ + 1 INCH	3.992 VOLTS	(3.992 − 2.863)(204.7) = 231.106		
℄	2.863 VOLTS	(2.863)(204.7) = 586.056	℄	586
INSERT	1.007 VOLTS	(1.007)(204.7) = 206.133	INSERT	206
			"COUNTS/INCH"	231

J. CURTISS

POSITION CALIBRATION

DEVICE POSITION	BENCH DATA (V)	RECORDED IN MCR
RETRACT	9.233	RETRACT 1890
℄ + 1"	3.992	
℄	2.863	℄ 586
INSERT	1.007	INSERT 206

COUNTS/IN ~ 231

$$(9.233)(204.7) = 1889.9$$

DATACON
MAGNITUDE READOUT

VOLTAGE	+5 0	+10 0	+10 −10
+ 10		4095	2047
+ 5	4095	2047	
0^+	0001	0001	0001
0	0000	0000	0000
0^-			4095
− 5			
−10			2048

DATACON SIGNAL

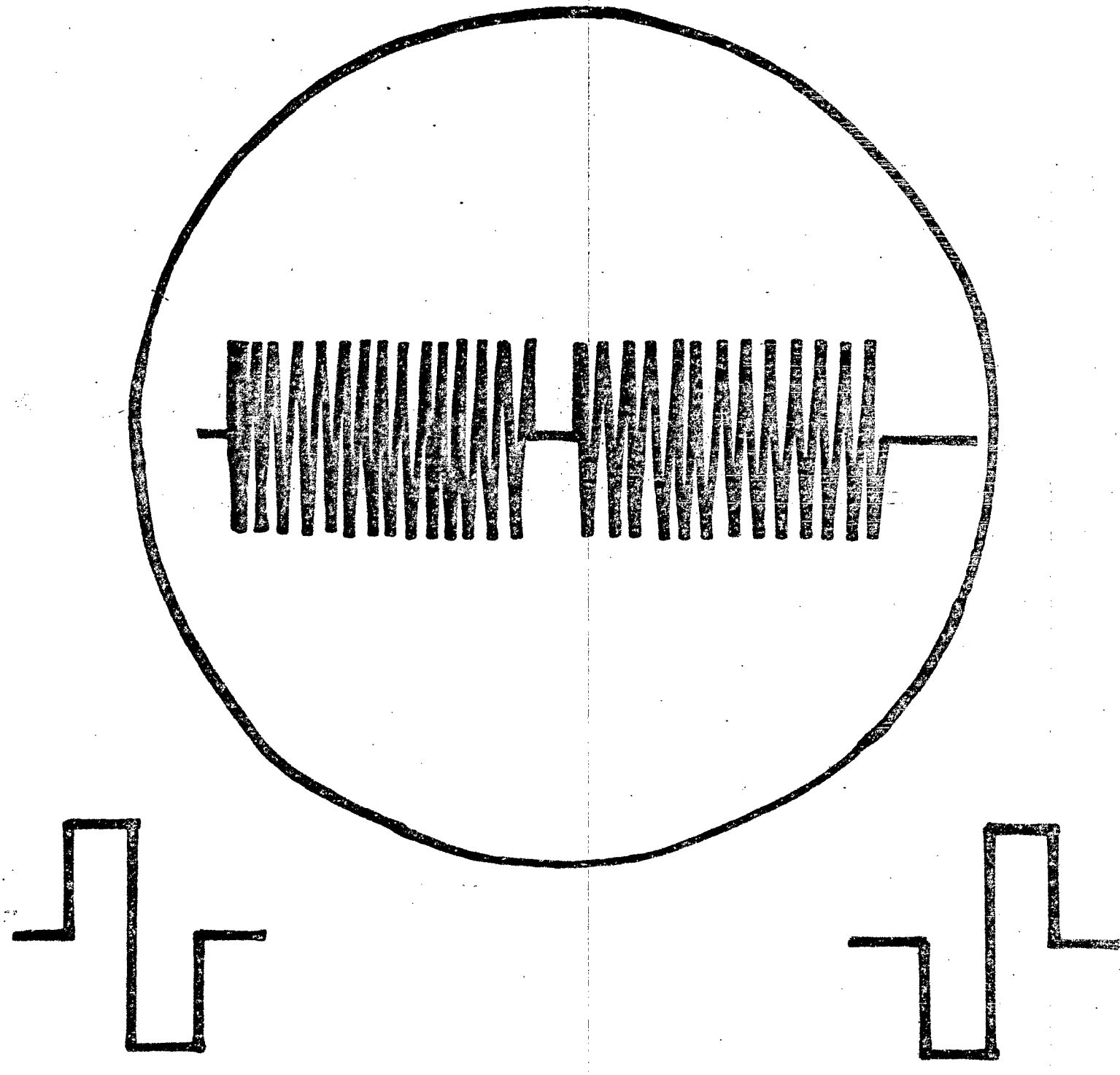

TRANSMISSION

FRAME
KEY
SET / READ
ADDRESS
MAGNITUDE
COMMAND
PARITY

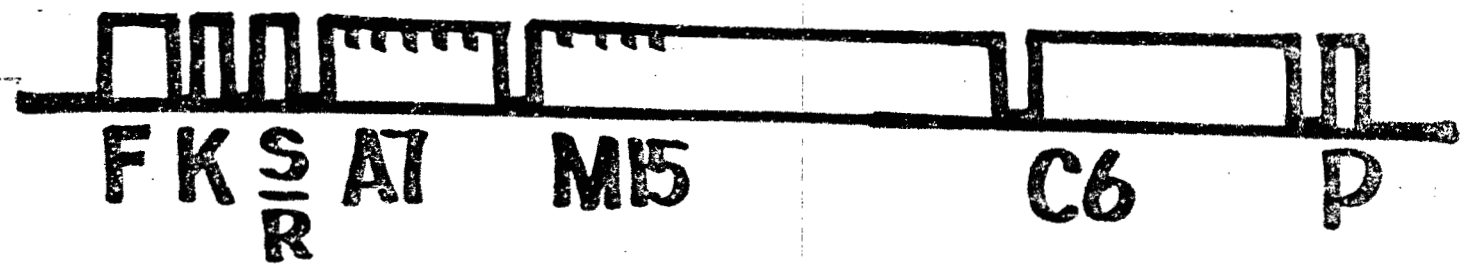

REPLY (6 μsec)

FRAME
KEY
DATA GROUP I
(MAGNITUDE)
DATA GROUP II
(STATUS)
PARITY

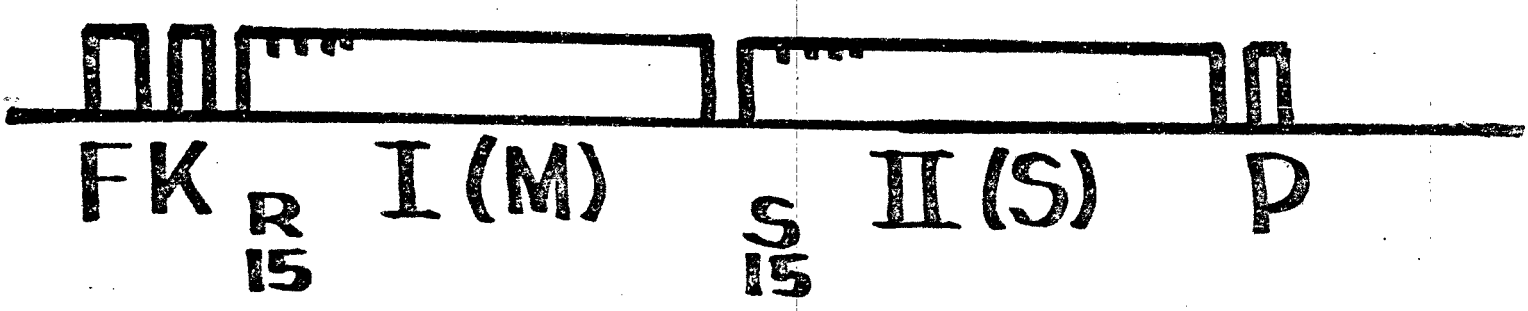

RECEIVER RECEIVING

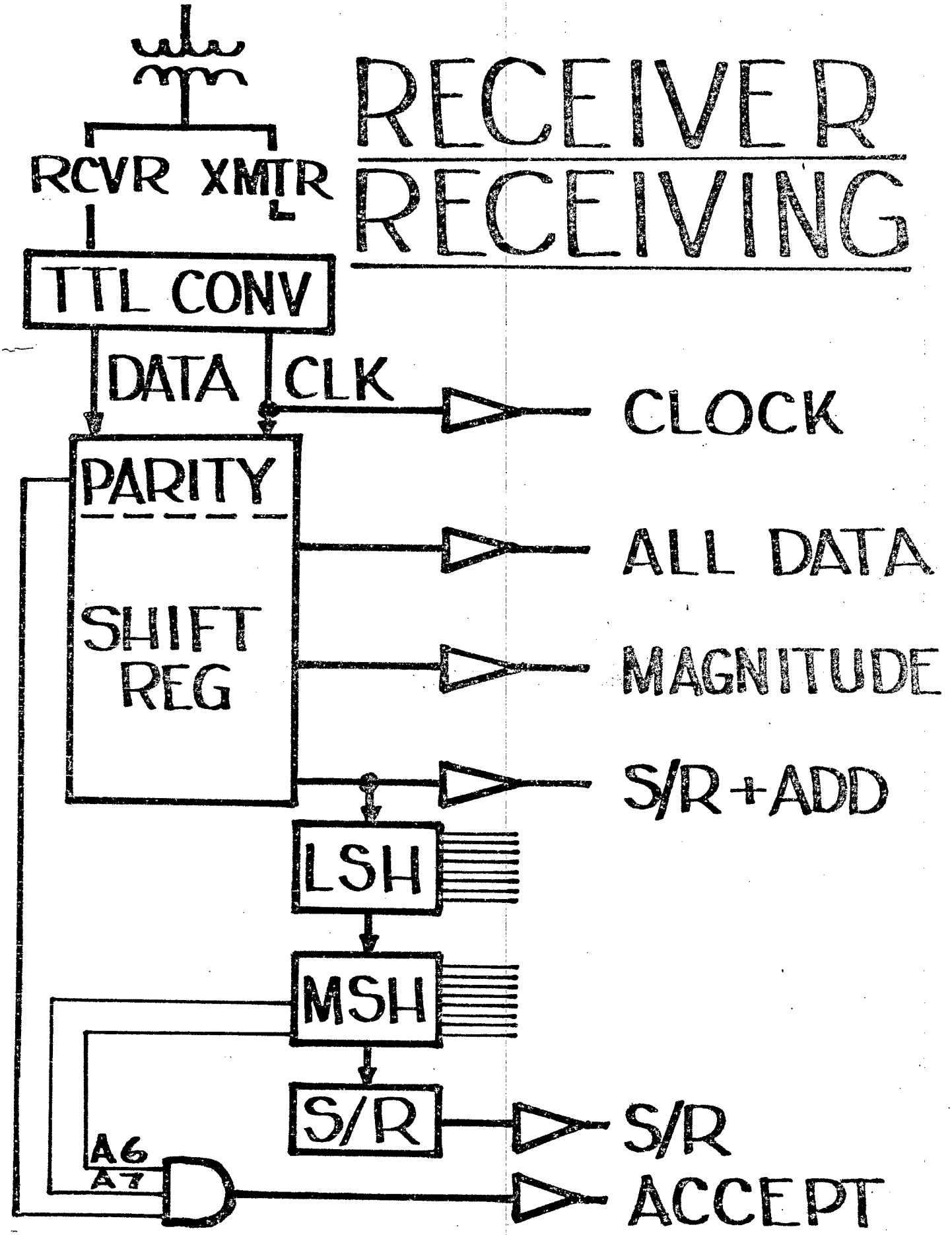

TWO-CHANNEL INPUT CIRCUIT

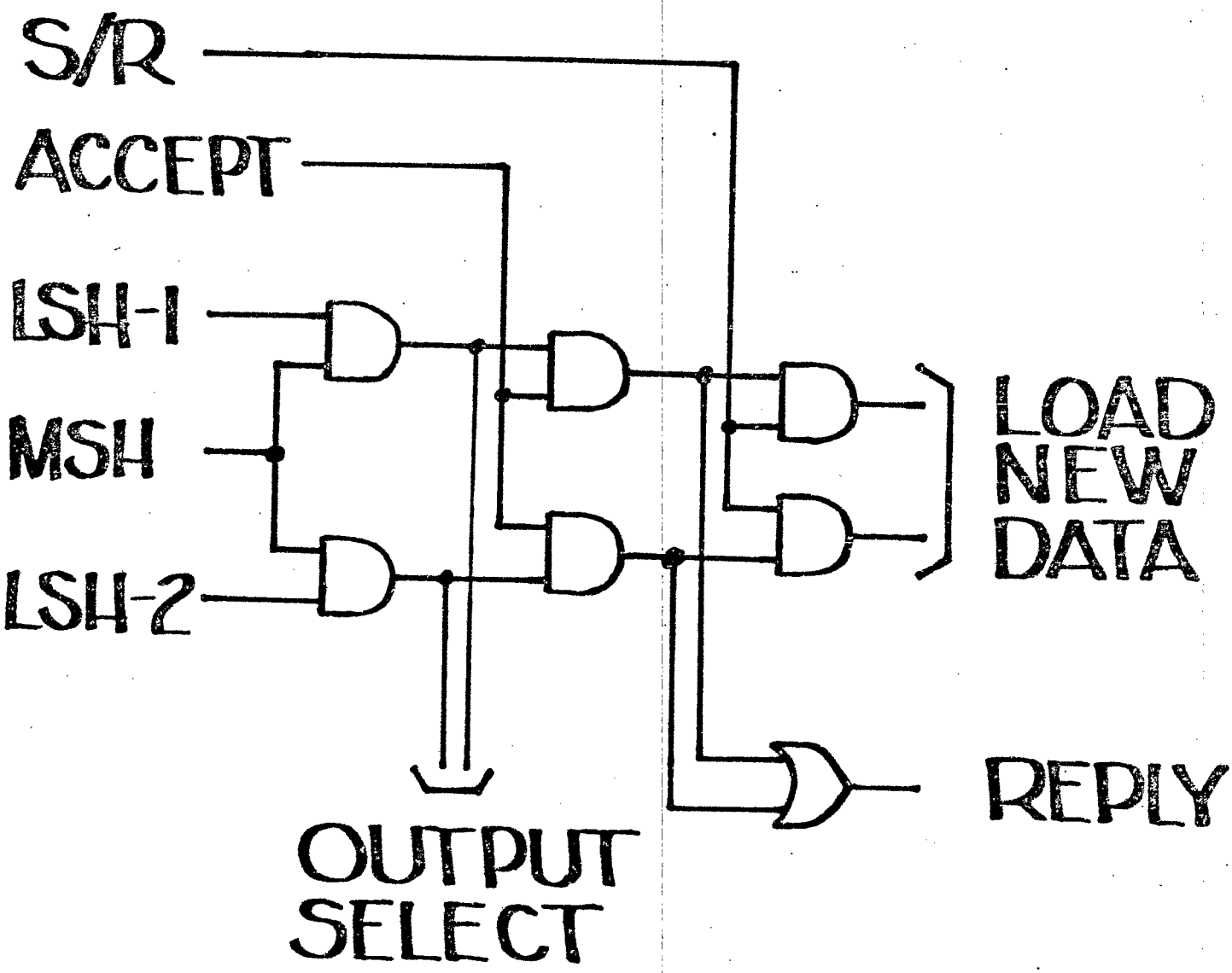

DUAL AUTODET
A/D CONVERTER
ANALOG MULTIPLEX
P.S. CONTROLLER
STEPPING MOTOR "
DUAL SCALER
I/O REGISTER
FUNCTION GENERATOR

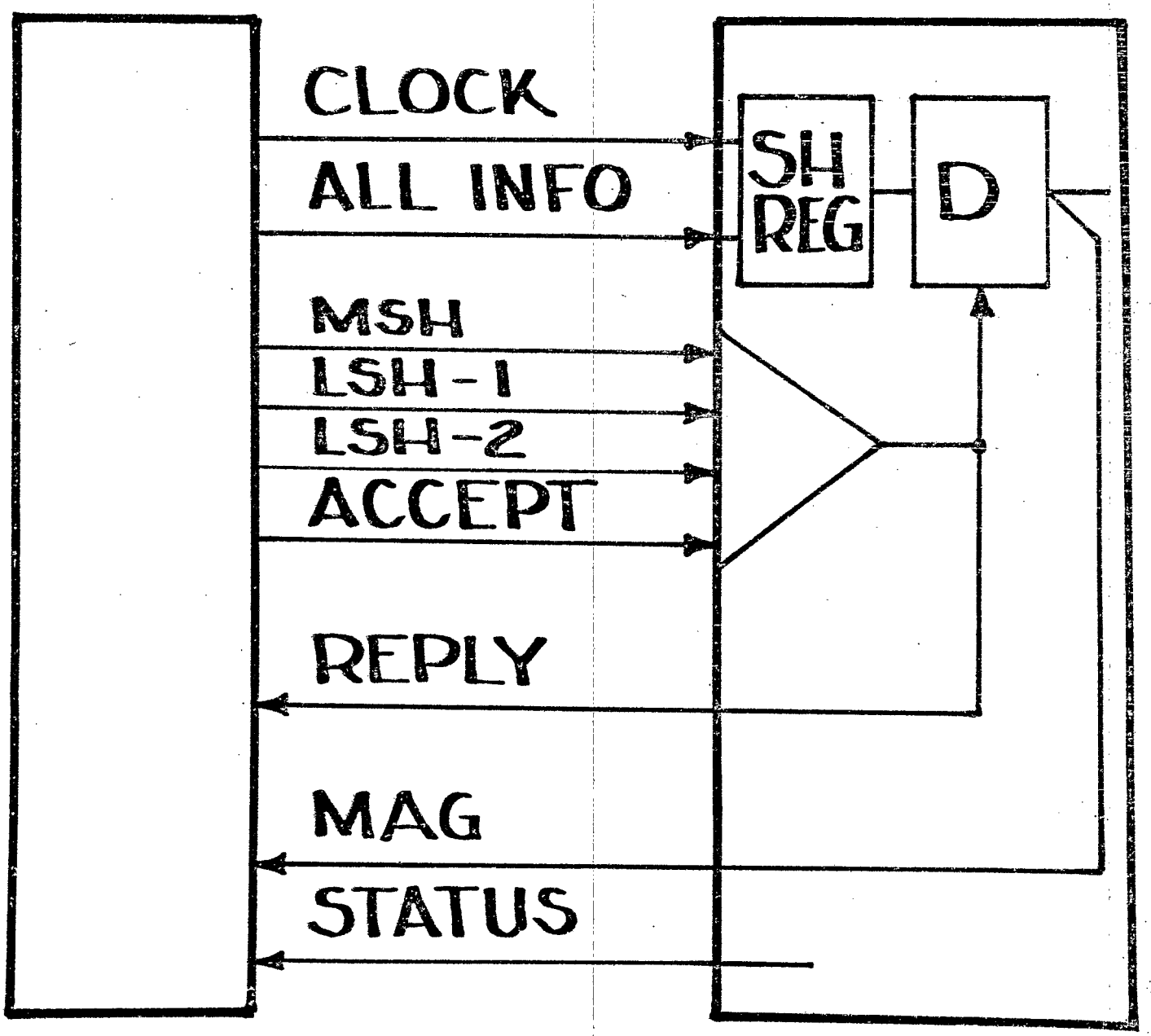
REMOTE RECEIVER
DUAL AUTODET
CLOCK
ALL INFO
SH REG
D
MSH
LSH-1
LSH-2
ACCEPT
REPLY
MAG
STATUS

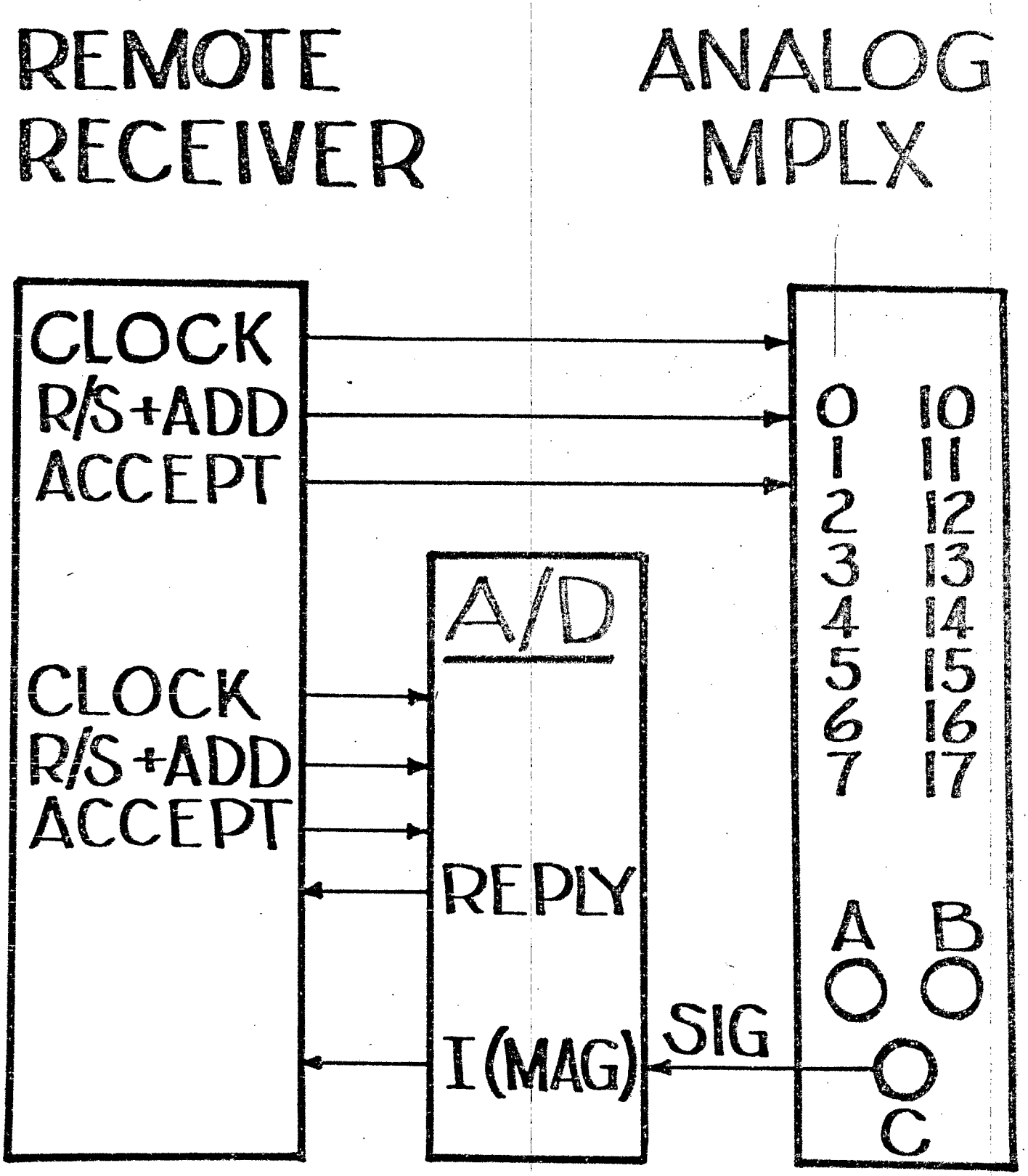
REMOTE RECEIVER
ANALOG MPLX
CLOCK
R/S+ADD
ACCEPT
CLOCK
R/S+ADD
ACCEPT
A/D
REPLY
I (MAG)
SIG
0 1 2 3 4 5 6 7
10 11 12 13 14 15 16 17
A
B
C

P. S. CONTROLLER

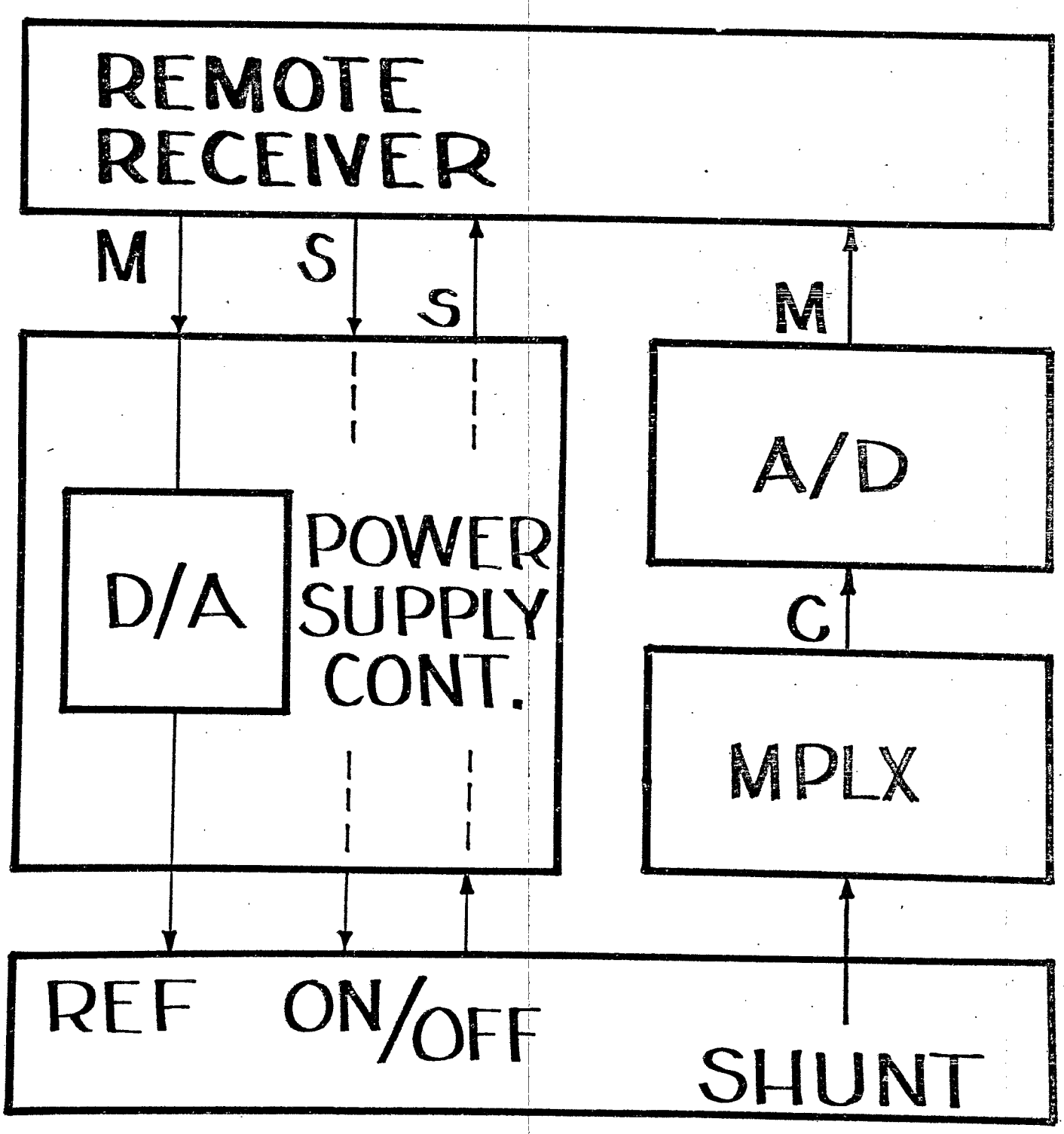

ENTERING DATCON

```
LOG XXX,XXX )
JOB 41 507A91 TTY35
PASSWORD: YYY )
1330 25-JAN-79 FRI
AAAAA ----
BBBB-----
CCCCC-----
.R DATCON )
*
```

```
* D PPA )
* A 344 )
* R )

CHAN  MAG   SM  STAT    ER---
0344  2026  00  024000
PPA   ------          ERRORS: 0

*
```

DATA TABLES

ADDRESS

200

200, 201, 202, 205

200 – 202, 205

MAGNITUDE

$_{10}$(4095)

0, 250, 500, 750

0, 250, 250, 250

0, 250!

COMMAND

$_{8}$(177)

7 BITS

PROGRAM CONTROL

ADDRESS
MAGNITUDE
COMMAND

READ
WRITE
BOTH

OUTPUT (OFF/ON)
X_{10}

POWER SUPPLY CONTROL

COMMAND

DC ON	STBY	RST	FREQ	–	I/P	POLARITY
C6	C5	C4	C3	C2	C1	C0

READBACK

STBY	ON	REG FLT	POL	–	–	–	–	I/P	SEC	LCL	MAG FLT
M15				0	0	0	0	0			M C

C 140) M 1000) B)

CHAN	MAG	SM	STAT
126	1001	00	140000

STEPPING MOTORS

COMMAND

0=IN 1=RET	ENABLE	HOME	–	–	–	–
C6	C5	C4	C3	C2	C1	C0
			0	0	0	0

READBACK

I/P	ENBL	HOME	HI LM	LO LM	LAST CW	–	–	–	–
M15									M0
						0	0	0	0

C 40) M 500) B)

CHAN	MAG	SM	STAT
0344	2010	00	164000