BNL-104522-2014-TECH

AGS/AD/Tech Note No. 89;BNL-104522-2014-IR

G-10 90ø MONITOR TELESCOPE

J. Guthy

January 1972

Collider Accelerator Department

Brookhaven National Laboratory

U.S. Department of Energy

USDOE Office of Science (SC)

DISCLAIMER

Accelerator Department
BROOKHAVEN NATIONAL LABORATORY
Associated Universities, Inc.
Upton, New York

AGS DIVISION TECHNICAL NOTE

No. 89

J. Guthy and G.W. Bennett
January 14, 1972

G-10 90° MONITOR TELESCOPE

This note updates and supplements AGS Tech Note No. 73 dated February 18, 1970.

The present electronics configuration is shown in Fig. 1. The multiplexer outputs are sent to the Main Control Room and to the Target Desk where it is further multiplexed for distribution to experimenters.

The current performance of the monitor, using the G-10 target in Fig. 2, is contained in the table; monitor counts are normalized to 10^{12} protons circulating. These data were taken after G-10 targeting efficiency had been optimized using a variety of indicators in the Main Control Room, and after a previous mylar foil run which showed the beam centerline at the target to be within .007 in. of the target height.

Signal	Counts/10^{12} protons
Triples	1430 ± 2%
A + B	1690
A + C	1710
B + C	1910
A	3820
B	3770
C	3290

HVA = 1.768 kV
HVB = 2.081 kV
HVC = 1.860 kV

This monitor is calibrated periodically and any significant deviations in performance will be published.

Distr: Department Administration
AGS Division Staff
EP&S Division Staff
AGS Experimenters

BROOKHAVEN NATIONAL LABORATORY

BY [illegible] DATE [illegible]

CHKD. BY _____ DATE _____

SUBJECT Gold Fabricated Logic

DEPT. OR PROJECT _____

SHEET No. _____ OF _____

JOB No. _____

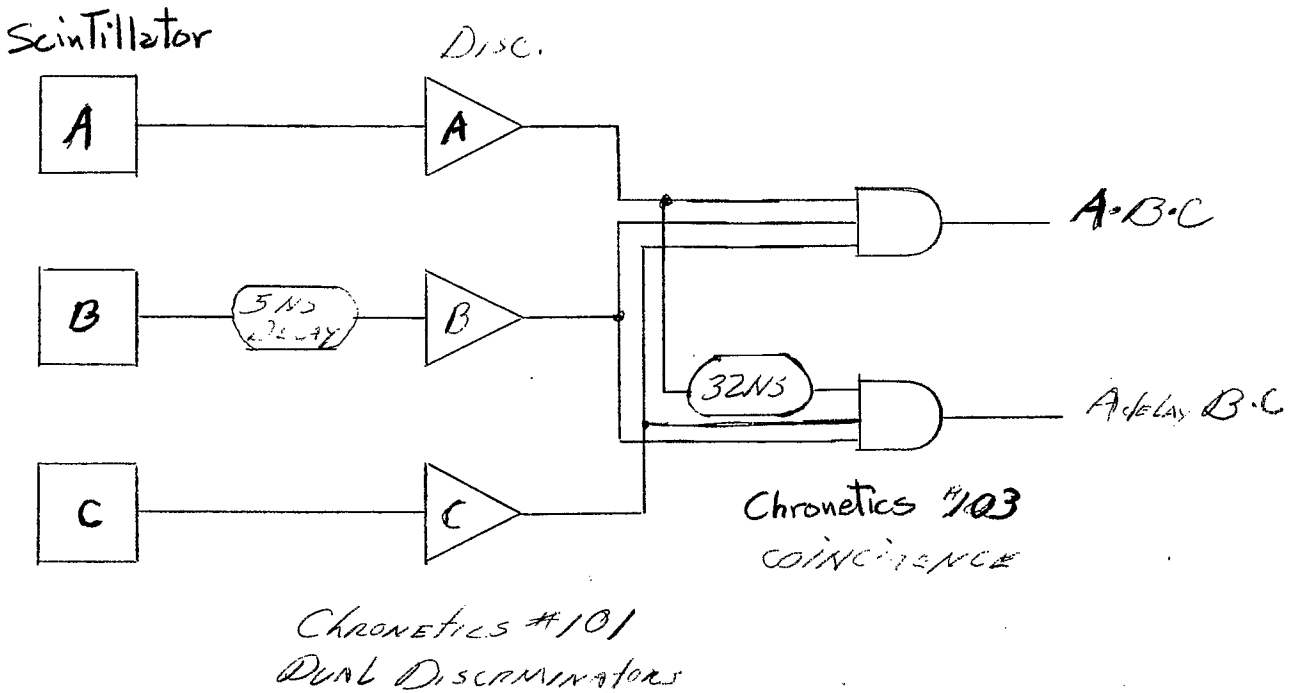

Fig 1

SP 11037A

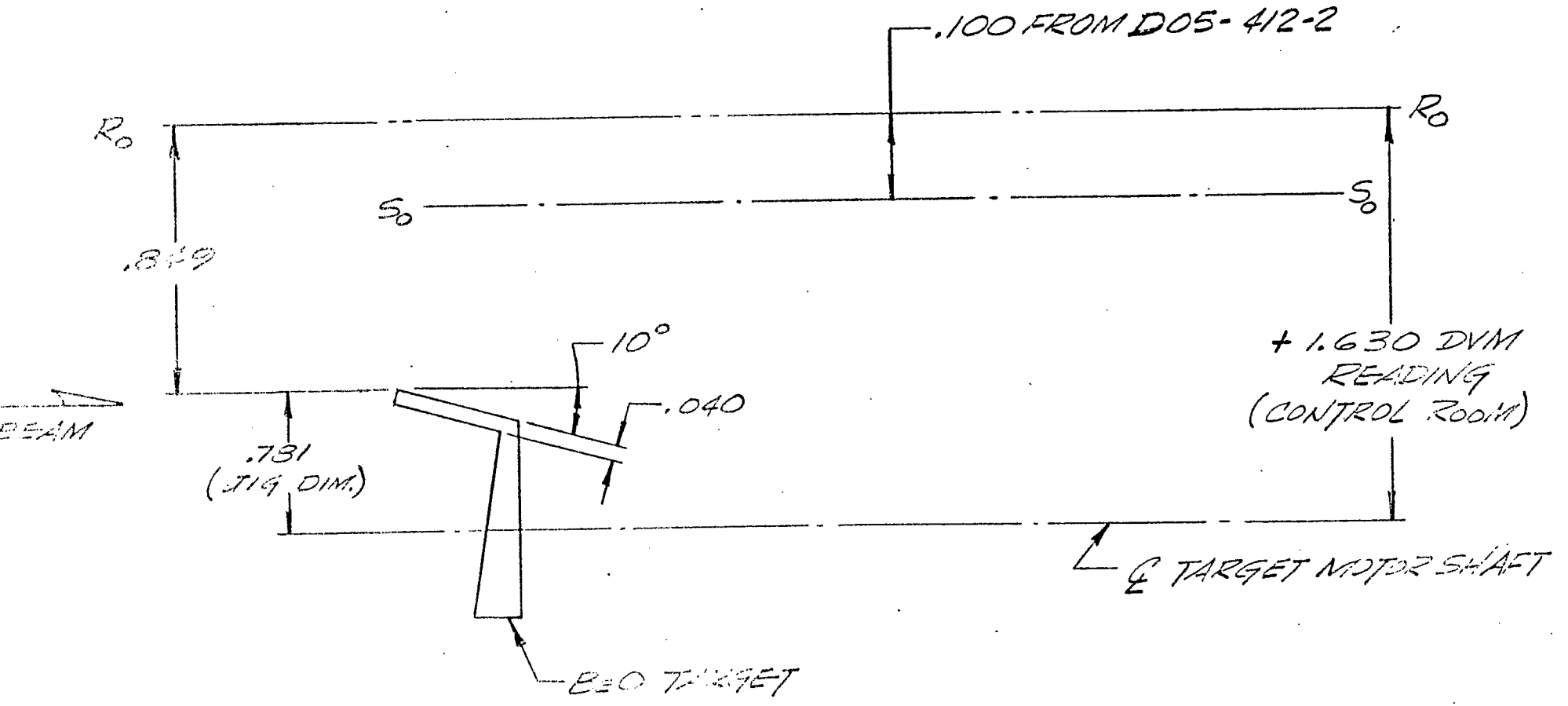

G10 OUTSIDE TARGET PLAN VIEW

BROOKHAVEN NATIONAL LABORATORY

BY Gailly DATE _____ SUBJECT Phototube light pipe SHEET No. _____ OF _____

CHKD. BY _____ DATE _____ JOB No. _____

DEPT. OR PROJECT _____

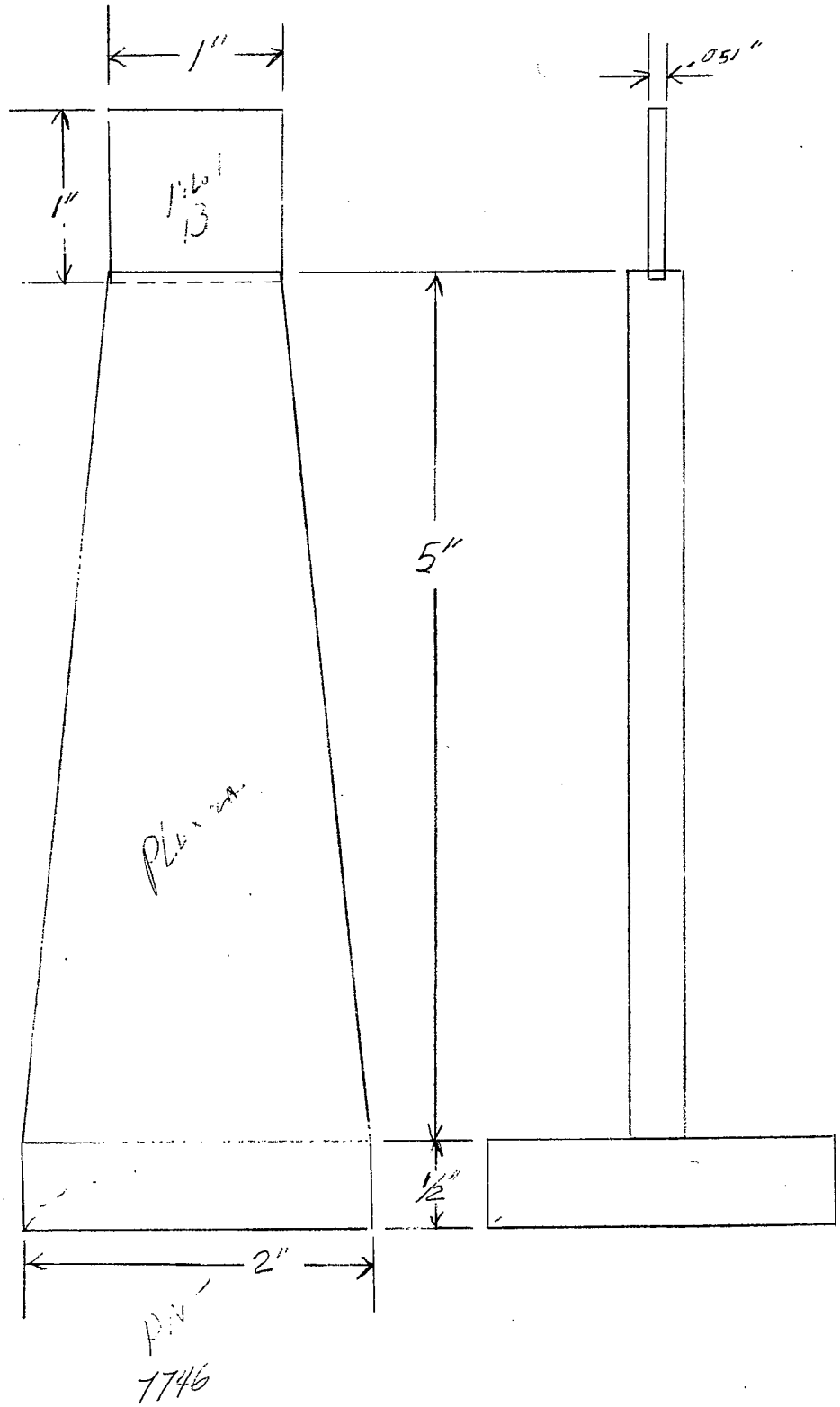

Fig 3

SP 11037A