BNL-104508-2014-TECH

AGS/AD/Tech Note No. 75;BNL-104508-2014-IR

A SPLITTER SYSTEM FOR THE SLOW EXTRACTED BEAM

J. J. Grisoli

March 1970

Collider Accelerator Department

Brookhaven National Laboratory

U.S. Department of Energy

USDOE Office of Science (SC)

Notice: This technical note has been authored by employees of Brookhaven Science Associates, LLC under Contract No.AT(30-1)-16 with the U.S. Department of Energy. The publisher by accepting the technical note for publication acknowledges that the United States Government retains a non-exclusive, paid-up, irrevocable, world-wide license to publish or reproduce the published form of this technical note, or allow others to do so, for United States Government purposes.

DISCLAIMER

This report was prepared as an account of work sponsored by an agency of the United States Government. Neither the United States Government nor any agency thereof, nor any of their employees, nor any of their contractors, subcontractors, or their employees, makes any warranty, express or implied, or assumes any legal liability or responsibility for the accuracy, completeness, or any third party's use or the results of such use of any information, apparatus, product, or process disclosed, or represents that its use would not infringe privately owned rights. Reference herein to any specific commercial product, process, or service by trade name, trademark, manufacturer, or otherwise, does not necessarily constitute or imply its endorsement, recommendation, or favoring by the United States Government or any agency thereof or its contractors or subcontractors. The views and opinions of authors expressed herein do not necessarily state or reflect those of the United States Government or any agency thereof.

Accelerator Department
BROOKHAVEN NATIONAL LABORATORY
Associated Universities, Inc.
Upton, New York

AGS DIVISION TECHNICAL NOTE

No. 75

J.J. Grisoli and H.C.H. Hsieh
March 12, 1970

A SPLITTER SYSTEM FOR THE SLOW EXTRACTED BEAM

I. Introduction

A beam of 10^{13} protons per pulse will be available after the AGS Conversion project is completed. The most efficient way of utilizing this high intensity beam will be by sharing on multiple target stations during the same AGS pulse. In the slow external beam, two target stations are being proposed. The beam will be split so that protons in the SEB will impinge on the two targets simultaneously. The percentage of sharing can be altered to any desired extent, including being able to send all the beam to one target. The device used to achieve this goal is a splitter system. A splitter unit is formed with two "C" type septum units facing each other. The center septum may or may not fuse into one. The fields inside of these side-by-side units are opposite to each other and this allows part of the beam to be bent in one direction and the other part in the opposite direction.

The goal set for the design of this system was to keep the transmission efficiency as high as possible, to obtain the desired separation at the lowest cost and to accomplish this in the amount of floor space in the beam direction available for this purpose. This goal calls for a very strong magnet with an extremely thin septum. Combinations of splitting units were considered to produce a total bend of ± 19.5 mrad. This note presents the

basic design and parameters of the final splitter system.

A cost comparison was made between a superconducting and a cold pure aluminum splitter unit. This comparison was used to guide the final design of the overall splitter system and is included at the end of this report.

II. Description of the Beam Splitter System

The beam splitter system consists of several units separated by beam drift space. Beam losses are kept low by using as the first unit a thin septum electrostatic beam deflection device which produces small bend angles. The last unit is a cryogenically cooled beam splitter magnet with a relatively thick septum capable of large bending angles. A series of studies on different combinations of components of a splitter system were conducted and the final system is shown in Fig. 1. It consists of a hyper thin septum, electrostatic unit for the first element, followed by a thin edge cooled copper septum unit, a steel shield, and as the last element, a superconducting splitter magnet. The steel shield is installed at the upstream end of the cold magnet assembly and shadows the thick superconducting septum in order to prevent heating of the septum as a result of beam interception in case of failure of either one or both of the upstream units. A study of this beam heating effect has been made by L. Blumberg.[1] The remainder of this report describes the units of the beam splitter system and some of the reasons for the specific parameter selection.

Element No. 1 - Electrostatic Splitter

An electrostatic deflector was selected for the first element because the effective thickness of the septum of this type of unit can be made extremely thin, allowing a high transmission efficiency. The minimal beam loss will result in low radioactivity in this area. The unit is a high voltage device with a series of .002 in. diameter tungsten wires spaced 2 mm apart as its septum (see Fig. 2). Since the beam width at this location will

be of the order of 1-1/2 in. (3.81 cm) the aperture width was selected at 5 cm per gap.

A length of 100 in. was considered a practical limit. The minimum space required between this unit and the .020 in. thick copper septum magnet was selected at 50 in. The reasons for the selection of .020 in. thickness for the second unit will be discussed under element #2.

Given the length of 100 in. for the deflector, 50 in. between elements, a .020 in. thick septum for the second element and introducing one additional requirement that the beam clear the second element by .010 in., we can solve for the required milliradians of bend and the voltage across the gap.

The total bend required of the deflector will be:

$$\phi = \pm \frac{.040 - .002}{2 \times 100} = \pm .00019 \approx \pm 0.2 \text{ mrad.}$$

The angle of bend per unit length of an electrostatic deflector is

$$\frac{\phi}{L} = \frac{.1074\ \epsilon}{\gamma} \quad \text{mrad/meter}$$

where ϵ = kV/cm and γ = 1 + the ratio of total proton energy to its rest energy. For the maximum proton kinetic energy of 30 GeV, under consideration, $\gamma = 33$.

The electric field value is therefore

$$\epsilon = \frac{\gamma\phi}{.1074L} = \frac{33 \times 0.2}{.1074 \times 100 \times .0254}$$

$$= 24.2 \text{ kV/cm.}$$

With a 10% safety margin

$$\epsilon' = 24.2 \times 1.1 = 26.6 \text{ kV/cm.}$$

This is a rather low and acceptable field value. The total length of the electrostatic splitter is kept, however, at 100 in., since the aperture width

is equal to 5 cm, and therefore, the total voltage across the gap would be

$$V = 26.6 \times 5 = 133 \text{ kV}.$$

Rather than increasing the absolute peak voltage across the gap which involves bulky high voltage "feed throughs", it was thought more desirable to keep the absolute voltage low. The electrode of the deflector will be designed so that the constant field region of this unit will be 1/2 in. high.

Element No. 2 - Water Cooled Magnetic Splitter

There are two reasons to introduce a thin edge cooled septum between the electrostatic deflector and the superconducting magnet. The first one is to provide a larger separation of the beam than can be obtained with an electrostatic device only in the available drift space. The second one is that in the case of failure of the electrostatic deflector, the splitter system would still be operational, although with a lower transmission efficiency. Without the introduction of the copper septum, the beam heating due to the failure of the electrostatic deflector would be 40 watts[1] on the last element. This amount of heat would cause the superconductor to go normal and would require a significant amount of time before steady state (4.2°K) conditions would be restored. The cross section of this magnet is shown in Fig. 3.

The thickness of the septum was chosen to be .020 in. because this represents only 2% of the total beam width, and even though a somewhat thinner septum could be chosen, the dimensional stability of an unevenly heated strip is rather difficult to maintain. This would result in a larger effective thickness due to thermal deformation and possible unreliable operation.

With a maximum current density of 15,000 amps/cm^2 and an aperture height of 5/8 in., the current in the septum will be

$$I_{s_{max}} = 15{,}000 \text{ amps/cm}^2 \times .02 \text{ in.} \times .625 \text{ in.} \times 6.452 \frac{\text{cm}^2}{\text{in}^2}$$

$$= 1210 \text{ amps}.$$

With a 15% safety margin

$$I_s = \frac{1210}{1.15} = 1050 \text{ amps.}$$

The field is

$$B = \frac{.4\pi NI}{\ell}$$

$$= \frac{.4\pi \times 1 \times 1050}{.625 \times 2.54 \times 2} = 416 \text{ gauss/gap.}$$

The angle of bend in radians for T = 30 BeV and a chosen steel length L = 48 in. is

$$\alpha = \frac{BL}{4.06 \times 10^4}$$

where B = the magnetic field in kGauss. Therefore,

$$\alpha = \pm \frac{.416 \times 48.625}{4.06 \times 10^4}$$

$$= \pm .0005 \text{ radians or } \pm 0.5 \text{ mrad.}$$

A summary of the other parameters of this magnet is as follows:

Room temperature resistance across magnet = $3 \times 10^{-3}\ \Omega$

Resistance at operating temperature = $3.7 \times 10^{-3}\ \Omega$

Duty cycle ≅ 50%

DC heat dissipation = 4.2 kW

Total voltage across magnet ≅ 4 volts

Maximum temperature of the septum at 50% duty cycle = 152°F

Water cooling required = 2 gpm

Total pressure drop across magnet - 150 psi

The maximum final temperature of the septum would be 230°F if this magnet were to run in the dc mode. The change in temperature from the center of the septum to the center of the cooling tubes, approximately 7/16 in., would be 119°F. This temperature gradient would cause severe thermal

deformation of the copper septum. In addition, the high gradient would cause a poor current density distribution across the gap which would result in more of a non-uniform field close to the septum. Therefore, the magnet has been calculated as a pulsed device with an estimated rise rate of 15 msec, a flat top of 1 second and a repetition rate of two seconds.

The force due to the magnetic field on either side of the septum will be theoretically equal and opposite in sense, therefore, the septum should not be under any lateral load. In view of the severe temperature rise of the septum all the end connections of this magnet will be carefully designed to provide a sufficient amount of flexibility so that the fatigue problem will be minimized. The possibility of using an edge cooled cold aluminum magnet for the second element was considered. The beam heating on this element in the event of electrostatic deflector failure would have been $\approx$ 400 watts.[1] This was too high to be practical.

Element No. 3 - Superconducting Magnet

A dc superconducting magnet assembly operating with liquid helium at 4.2^{o}K is proposed for the last element of the splitter system. It is required to produce a total bend of ± 18.8 mR with a gap height of 1 in. The cross section of this magnet is shown in Fig. 4. The conductor will be a niobium tin solid ribbon with copper as a stabilizer on both sides. The current density in the composite will be 50,000 amps/cm^2.[(2)] Turn-to-turn insulation will be provided by using .0003 in. stainless steel tape while the ground insulation will be anodized aluminum strips. A length of 48 in. was selected for this unit.

For an 18.8 mrad bend at 30 BeV the field required in the magnet will be

$$B = \frac{4.06 \times 10^4 \times \alpha}{L}$$

L = effective magnet length

α = angle of bend in radians.

Therefore,

$$B = \frac{4.06 \times 10^4 \times .0188}{49}$$

$$= 15.5 \text{ kG}$$

A .007 in. nominal thickness superconducting ribbon and a .0003 in. nominal thickness insulating tape were selected which would make the per turn thickness of the composite = .0073 in., ignoring packing factor. In the 1 in. height of the gap, this would allow 137 turns. If we let the packing factor equal 94%, the number of turns that could be fitted in this space would be 128.

Then

$$I = \frac{B\ell}{.4\pi N}$$

$$= \frac{15,500 \times 1 \times 2.54}{.4\pi \times 128}$$

$$= 242 \text{ amps.}$$

If we set the current density = 50,000 amps/cm^2, the ribbon width will be

$$= \frac{242}{.007 \times 50,000 \times 6.452}$$

$$= .107 \text{ in.}$$

We shall select a ribbon of .007 in. thick x .118 in. wide due to the availability of this commercial stock size. The current density will be 45,500 amp/cm^2.

Figures 4 and 5 show views of the superconducting splitter magnet with the proposed vacuum chambers in place. This magnet will be entirely surrounded by liquid helium. Natural convection will be used to maintain the assembly below the critical temperature. Helium passages will be provided by slotting the aluminum insulation strips and by leaving space between groups of laminations. The assembly will be suspended at two points to

reduce the heat influx from the $300^{\circ}K$ environment. It is proposed that this magnet be energized by a flux pump which will share the same dewar system.

The iron core will have a cross section of 7 in. x 14 in. with an opening of 1 in. x 6 in. The total mass of this core assembly will be

$$\left[(7 \times 14) - (1 \text{ in.} \times 6 \text{ in.})\right] \times 48 \times 1/3 \simeq 1500\#.$$

Cool down enthalpy from $300^{\circ}K$ to $77^{\circ}K$ will be

$$1500 \times 33.4 = 5 \times 10^4 \text{ Btu.}$$

Cool down enthalpy from $77^{\circ}K$ to $4.2^{\circ}K$ will be

$$1500 \times 1.5 = 2250 \text{ Btu.}$$

In view of the large amount of enthalpy required from $300^{\circ}K$ to $77^{\circ}K$, an independent cooling circuit will be provided for the iron core by flowing liquid nitrogen through a series of flat copper tubings. These tubings are mechanically held against the iron core. The initial cool down will rely on conduction and forced convection. This may prolong the cool down period, but it seems to be the more economical way to achieve the purpose. Liquid hydrogen could be used to cool the assembly down to $20^{\circ}K$, but the safety precautions required when using this liquid make it less attractive than using liquid helium to cool the assembly down to $4.2^{\circ}K$ by natural convection.

For a 4 ft long magnet, the length of the dewar system would be 6 ft long. Heat loss through the dewar has been conservatively estimated at 1 watt per foot of dewar length; 1.5 watt per end, 1.5 watt per electrical lead.[3] The beam heating is estimated to be 2 watts.[1] Similarly, the I^2R loss from the soldered joints has been estimated to be 0.5 watts. Then the total heat dissipation will be

$$1 \times 6 + 2 \times 1.5 + 2 \times 1.5 + 2 + 0.5 \cong 15 \text{ watts.}$$

Using a safety factor of 2, the refrigerator will be rated so that a cooling load of 30 watts can be handled. The refrigeration efficiency is 7% of the

Carnot cycle efficiency.[4]

The refrigerator input power will be

$$= \frac{300-4}{4} \times \frac{1}{.07} = 1000 \text{ W/W}.$$

Then the total refrigeration requirement is

$$= 30 \times 1000 = 30 \text{ kW}.$$

Total septum thickness which includes vacuum chambers, helium passages and superconductors, will be approximately .350 in. thick. Let the clearance between the beam and the septum be .050 in.

Then between the center of the copper magnet and entrance end of superconducting magnet the drift space required is

$$= \frac{.350 - .020 + .100}{.0005 \times 2}$$

$$= 430 \text{ in.}$$

The bend contributed by the electrostatic deflector was purposely ignored in order to provide a second operational option in case of deflector failure.

The steel shield will be made exactly the same thickness as the superconducting septum so that under no circumstances will the particles impinge on the superconductor.

In view of the detrimental effect on the superconducting magnet in case of an accidental misalignment between the steel shield and the superconducting magnet, it is proposed to place the shield as close as possible to the superconducting magnet so that these two units will share the same mounting platform. All the adjustments will be accomplished by the same mechanical system which will insure perfect alignment at all times.

The cross section of the steel shield is shown in Fig. 6. A partial list of the parameters of each element is listed in Table I.

TABLE I Parameters - Splitter System

Element No.	1	2	3
Type of Unit	Electro-static	Electro-magnetic	Electro-magnetic
Type of Coil	Tungsten wire	OFHC copper	Superconductor Nb_3Sn
Septum Thickness (in.)	.002 dia.	.020	.350
Usable Aperture (in.)	1/2 x 2	5/8 x 2-1/4	7/8 x 2-1/4
Field Per Gap (kG)	--	.416	15.5
kV/cm	26.6	--	--
Effective Magnetic Length (in.)	--	48-5/8	49
Electric Field Length (in.)	100	--	--
Total Bend (mrad)	± .2	± .5	± 18.8
Ampere Turn Per Gap	--	525	31×10^3
Current in the Septum (amp)	--	1050	242
Current Density in the Septum Amp/cm^2	--	13,000	45,500
Duty Cycle %	100	51.5%	100
Coolant	--	water	LH_e

III. Cost Comparison Between a Superconducting Splitter Magnet and a Pure Aluminum Splitter Magnet

A splitter system with a cryogenic magnet was adopted. Then the parameters which define the cryogenic magnet were used for cost estimating purposes. The comparison was based on an identical design approach with the exception of differences in coil material, coil size and coolant. The two magnet assemblies had the same usable aperture, total septum thickness, maximum field and effective magnetic length. Both assemblies were suspended inside either a liquid hydrogen or liquid helium bath. The results of this cost comparison is shown in Table II.

The costs of refrigeration were taken from the average curve in a published paper by T.R. Strobridge.[4] No attempt was made to distinguish the difference between 4.2°K and 15°K.

The major part of the cost of a cryogenic magnet is its refrigeration system. For the pure aluminum case, one should try to utilize the best material available commercially, i.e., the material which will have the highest resistivity ratio gain from 300°K to 15°K, this is especially true for the magnet which does not require large amounts of material.

For a "6-9" pure aluminum, with a resistivity ratio of 15,000 the bulk specific resistivity equals:

$$\rho_{15^oK} = 1.12 \times 10^{-9}\ \Omega\text{-cm}$$ [5]

for a purer aluminum with a ratio of 40,000 this value becomes

$$\rho_{15^oK} = 5.25 \times 10^{-10}\ \Omega\text{-cm.}$$ [5]

The above resistivity data include a factor of 2.8[6,7] for the magneto resistance effect. The purer aluminum with the resistivity ratio of 40,000 was used in this cost comparison. The size effect of the conductor on the resistivity ratio was not taken into consideration.

There are many different cooling methods which can be applied to both

TABLE II

Type	Usable Aperture H x W (in.)	Total Septum Thick (in.)	Eff. Cond. Size (in.)	Max B (kG)	Mag. St'l Length (in.)	Total Bend 33 BeV/c (mR)	I x 10^3 amp	J x 10^3 amp/cm^2	No. of Turns	Temp ^oK
Sup.	7/8 x 2-1/4	.350	.118 x .007	15.5	48	18.8	.242	45.5	128	4.2
Al	7/8 x 2-1/4	.350	.500 x .065	15.5	48	18.8	7.7	38	4	15

Dissipation Watts				Initial Cost $ x 10^3								Oper.* Cost/Yr $ x 10^3	Remark
I^2R	Dewar	Beam	Total	Coil	Core	Ref	Dewar	Tran Line	P.S.	Misc	Total		
0.5	12.5	2	15	4.5	5.5	60	15	3	4	15	107	2.1	
336	12.5	2	350	2.5	5.5	100+	7.2	2	10.5	15	142.7	3.5	

+No factor of safety added to refrigeration capacity.

*Operating cost/year shows power cost of refrigeration unit only.

magnet assemblies. For the superconducting type coil, natural convection is assumed. On the other hand, examination of the Lorentz formula for the pure aluminum case

$$\frac{K}{\sigma T} = C \ , \qquad \text{where}$$

σ = electrical conductivity Ω^{-1} cm^{-1}

T = absolute temperature ^{o}K

K = thermal conductivity cal/sec/cm/^{o}K

C = constant = 2.23×10^{-8}

indicates that pure aluminum will have a very high thermal conductivity at $15^{o}K$, and therefore, that cooling of the aluminum septum by conduction would not be excluded. This could reduce the complexity of fabricating this magnet assembly. J. Allinger has investigated the thermal conductivity of the "6-9" purity aluminum; the result of these tests shows that a current density in the conductor of 50,000 amp/cm^2 is possible with two liquid hydrogen heat sinks located 12 in. apart. The temperature gradient between the center of the tested sample and the heat sinks will reach a value high enough to create runaway heating and eventually fuse the sample if the above current density is exceeded. The test was done with zero field.

Extrapolating from Allinger's test results, taking into account the difference in resistivity between the "6-9" purity aluminum used and a purer aluminum with a resistivity ratio of 40,000,and the magneto resistance effect (a factor of 2.8), we find that we could build an end cooled cold aluminum splitter for the last element. A design was studied consisting of two elements, one 16 in. long, the other 32 in. long with a 12 in. drift space in between. However, the cost savings over the free convection cold aluminum splitter is only approximately 10%. This splitter would still represent a cost increase over the superconducting magnet of approximately 20%.

In addition, the end cooled type magnet will always have a higher risk of coil failure due to runaway heating than the free convection type.

An investigation on the possibility of running pure aluminum at helium temperature was made. The gain in resistivity from 15°K to 4.2°K will not offset the increase in refrigeration cost.

For both systems 100% duty cycle operation was considered. The parameters of the aluminum splitter with a 1 second flat top in a 2 second period were briefly examined. The reduction in refrigeration cost would be offset by the additional cost of the power supply and the magnet.

We have also investigated the possibility of designing a conventional water-cooled copper conductor magnet. The total cost of this type of magnet would be approximately $23,000 less than the superconducting magnet, but the power consumption would be 400 kW. The power cost alone would be $25,000/year which is $23,000/year more than that of the superconducting magnet. Due to the relatively low current density that can be used in this type magnet, the space required for ± 18.8 mrad would be longer, and the final temperature of copper conductor would be very close to the boiling point of water.

Because future beam splitter devices may require significantly larger bend angles, if the total length were more limited, a parameter optimization study and cost comparison was also made for a superconducting septum and a pure aluminum septum unit where the net bend angle would be three times larger than the devices considered so far. Again, the result showed a higher cost for the aluminum septum device by approximately 40% over the superconducting device.

Acknowledgments

The basic parameters of the final splitter system evolved gradually and are the result of a joint study effort of A. van Steenbergen, L. Blumberg and the authors. We wish to thank J.G. Cottingham for his comments regarding the power supplies for these units. The following persons were involved in discussions regarding either superconducting or cold aluminum magnets. For their helpful information and comments, we wish to thank J. Allinger, R. Britton, G. Danby, R. Gibbs, J. Jensen, W. Sampson and A. Schlafke.

Distr: Department Administration
AGS Division Staff
EP&S Division Staff
AADD Division Staff

References

1. L. Blumberg, "Energy Deposition in Cryogenic Splitter Magnet," Accel. Dept. Int. Rep. AGS DIV 69-7.

2. R. Britton, private communication.

3. A. Schlafke, private communication.

4. T.R. Strobridge, "Refrigeration for Superconducting and Cryogenic System," IEEE Trans. Nucl. Sci. NS-16, Pt. I, 1104, 1969.

5. J. Allinger, et al., "High Field Iron Magnets For Operation at Cryogenic Temperatures," IEEE Trans. Nucl. Sci NS-16, Pt. I, 728, 1969.

6. R.J. Corruccini, National Bureau of Standards Technical Note 218, (1964).

7. V. Arp, "Properties and Preparation of High-Purity Aluminum," Proc. 1968 Summer Study on Superconducting Devices and Accelerators, 1095, 1968.

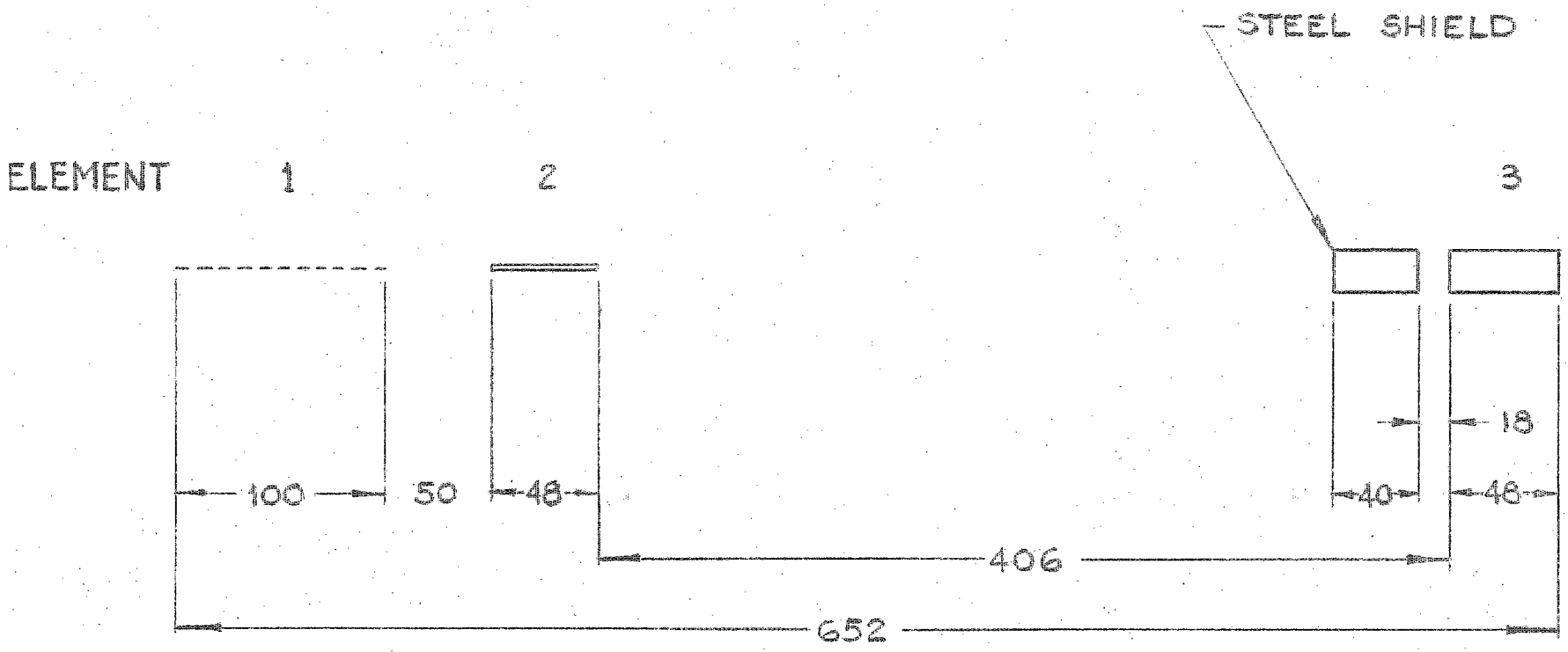

Fig. 1 Splitter System Layout

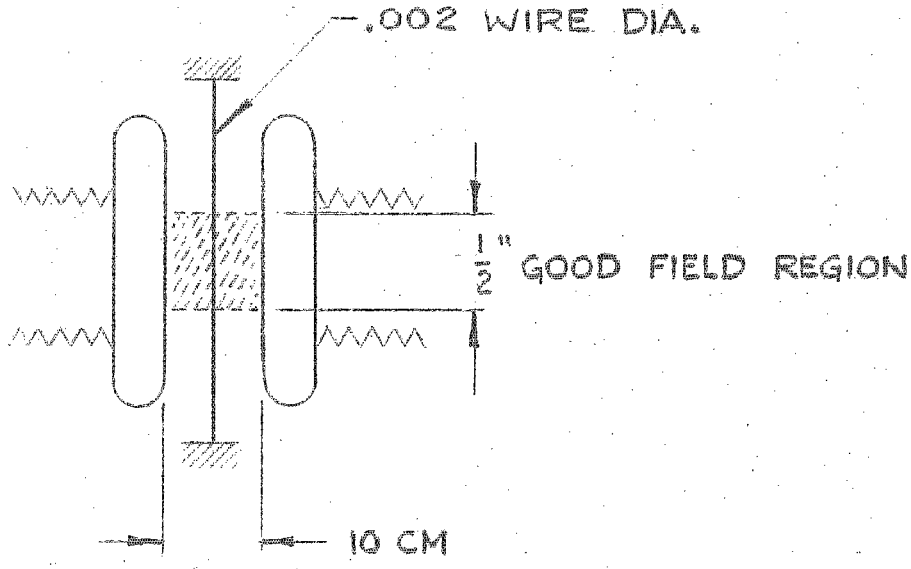

Fig. 2 Electrostatic Deflector Schematic

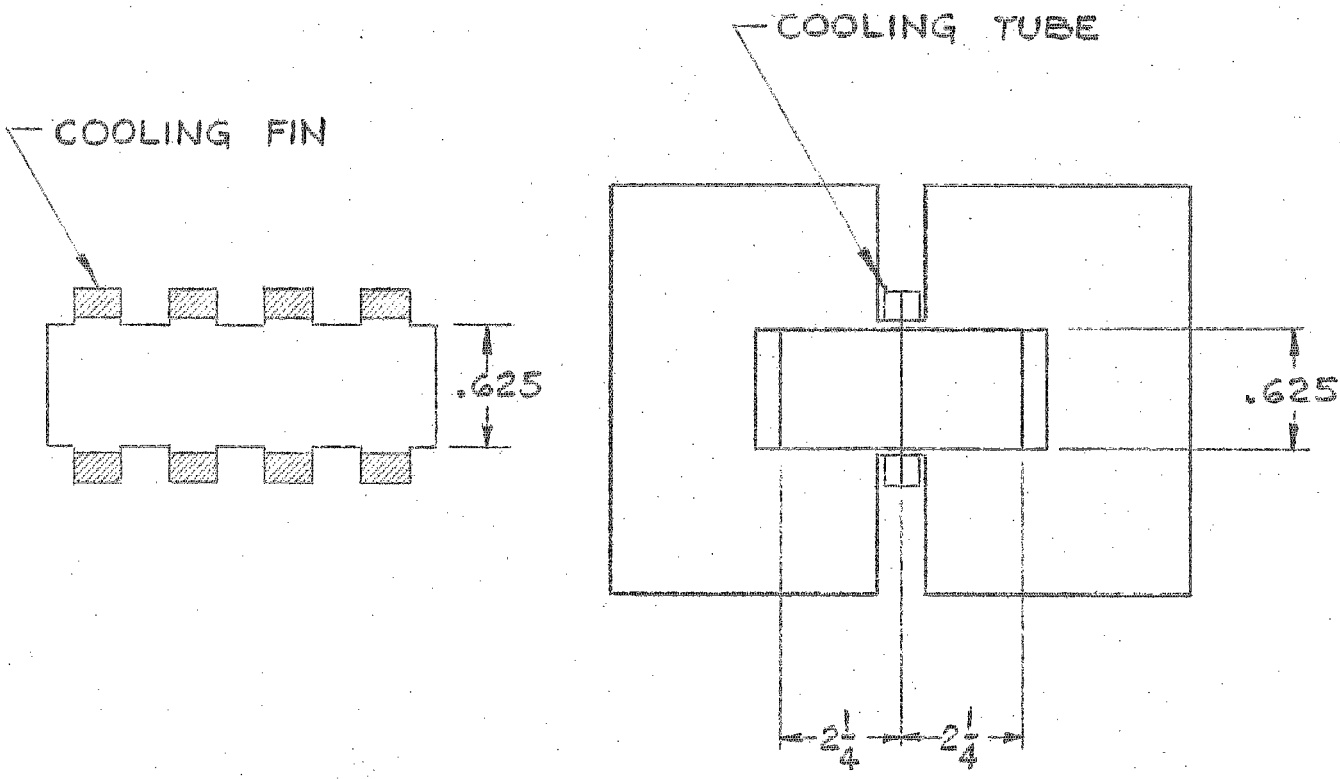

Fig. 3 Copper Septum Splitter

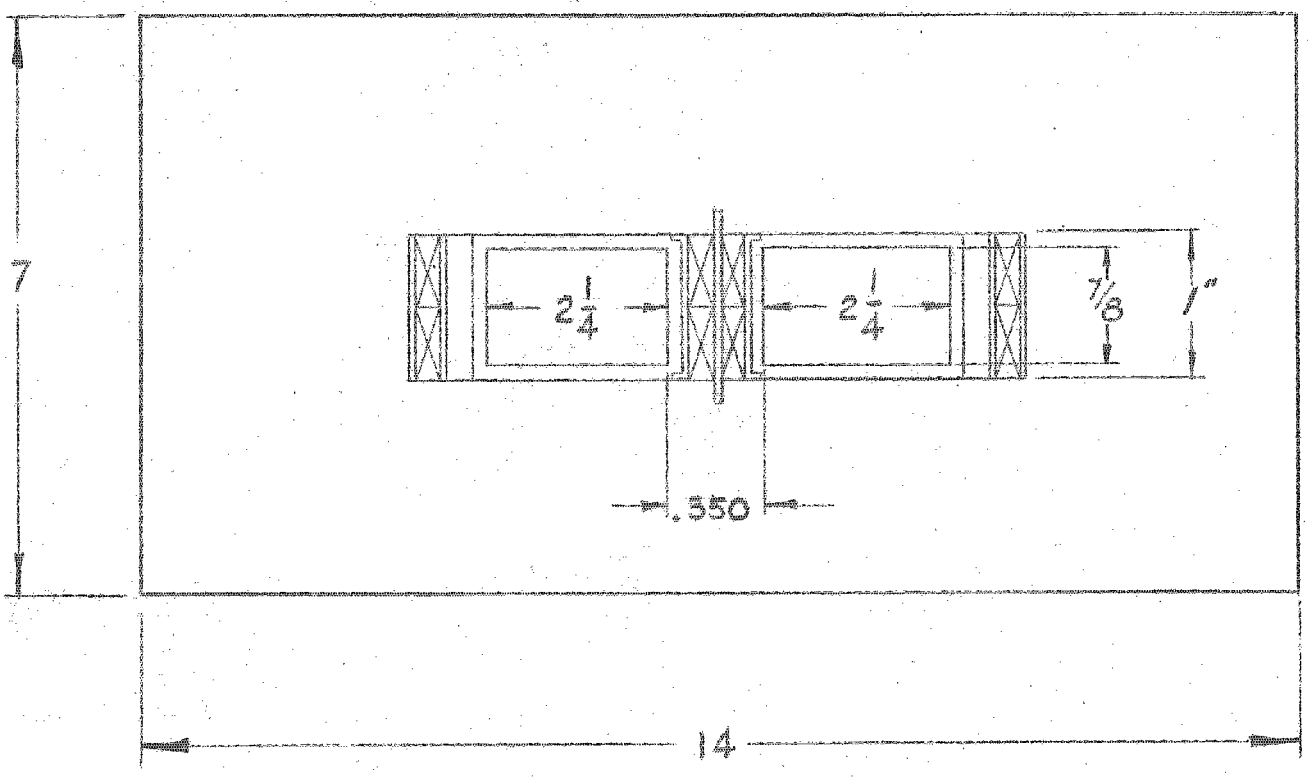

Fig. 4 Superconducting Splitter

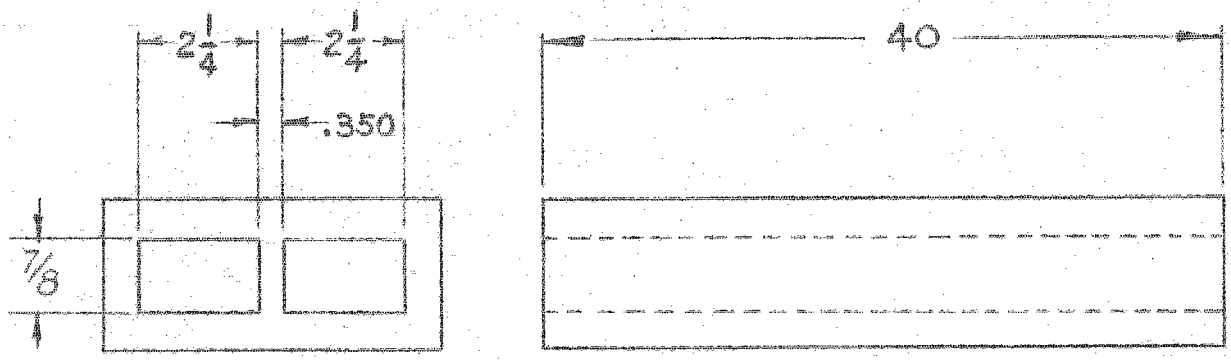

Fig. 6 Steel Shield

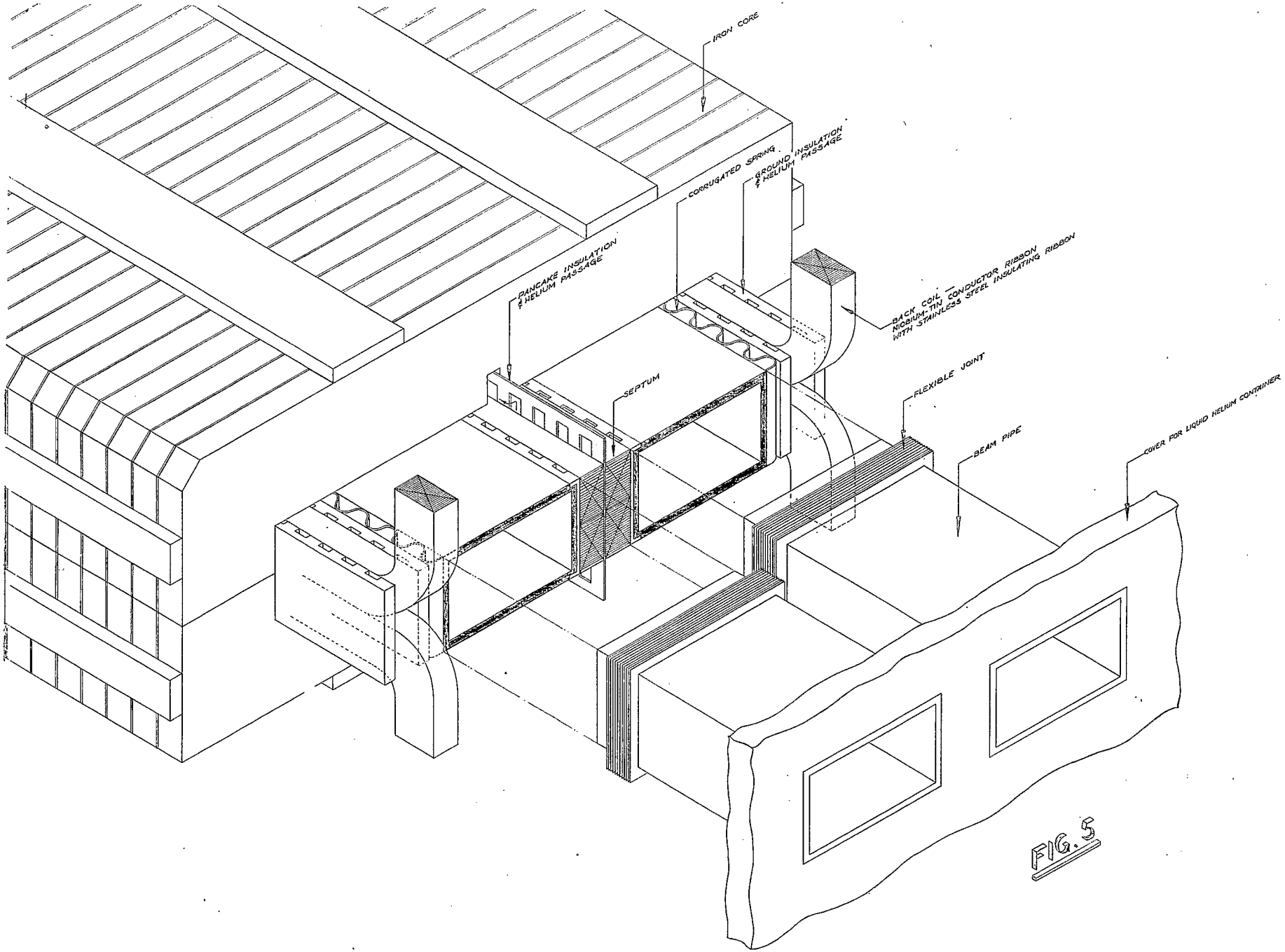

Superconducting Splitter Assembly