BNL-219082-2020-TECH

ASC2002-1;PAPER

Superconducting Magnets for the International Accelerator Facility for Beams of Ions and antiprotons at GSI

G. Moritz

December 2002

Superconducting Magnet Division

Brookhaven National Laboratory

U.S. Department of Energy

~OTHER

Notice: This technical note has been authored by employees of Brookhaven Science Associates, LLC under Contract No.DE-AC02-98CH10886 with the U.S. Department of Energy. The publisher by accepting the technical note for publication acknowledges that the United States Government retains a non-exclusive, paid-up, irrevocable, world-wide license to publish or reproduce the published form of this technical note, or allow others to do so, for United States Government purposes.

DISCLAIMER

This report was prepared as an account of work sponsored by an agency of the United States Government. Neither the United States Government nor any agency thereof, nor any of their employees, nor any of their contractors, subcontractors, or their employees, makes any warranty, express or implied, or assumes any legal liability or responsibility for the accuracy, completeness, or any third party's use or the results of such use of any information, apparatus, product, or process disclosed, or represents that its use would not infringe privately owned rights. Reference herein to any specific commercial product, process, or service by trade name, trademark, manufacturer, or otherwise, does not necessarily constitute or imply its endorsement, recommendation, or favoring by the United States Government or any agency thereof or its contractors or subcontractors. The views and opinions of authors expressed herein do not necessarily state or reflect those of the United States Government or any agency thereof.

Superconducting Magnets for the 'International Accelerator Facility for Beams of Ions and Antiprotons' at GSI

Gebhard Moritz

***Abstract*—The concept for GSI's planned future facility is based on two superconducting synchrotrons, SIS 100 and SIS 200. The two accelerators are in the same tunnel and have the same radius R, for operation at BR = 100 Tm and 200 Tm respectively. Superconducting magnets are necessary to reach the appropriate magnetic field and may considerably reduce the investment and operating costs, in comparison with conventional magnets. An R&D program was initiated to develop dipole magnets with maximum fields of 2 and 4 Tesla and dipole ramp rates of 4 T/s and 1 T/s, respectively. These requirements were chosen to achieve high average beam intensities. The SIS 100 dipole is a window-frame Nuclotron-type dipole and is being developed in collaboration with JINR (Dubna, Russia). This magnet has been operated at 4 T/s up to a field of 2 Tesla. Reduced losses and improved magnetic field quality are required for the SIS 100 accelerator. In a separate collaboration with BNL (Upton, USA), the one coil layer cos θ-type RHIC arc dipole, originally designed for operation at 3.5 Tesla with a rather slow ramp rate of 0.042 T/s, will be upgraded for the SIS 200 accelerator to operate at a ramp rate of 1 T/s, up to a field of 4 T. R&D for a 6 Tesla dipole was started in collaboration with IHEP (Protvino, Russia), to further increase the rigidity of the SIS 200 ring to 300 Tm. Alternative schemes have been investigated. Besides the synchrotrons, the planned facility will consist of several storage rings and the Super Fragment Separator (SFRS), which have mainly DC magnets with large apertures. NSCL (East Lansing, USA) prepared a feasibility study for these superconducting magnets. The main results of the R&D are presented.**

***Index Terms*—Antiproton beams, fast-ramped superconducting accelerator magnets, heavy ion beams, radioactive ion beams.**

I. Introduction

GSI has proposed the upgrade of its existing accelerator facility to an "International Accelerator Facility for Beams of Ions and Antiprotons" [1] (see Fig. 1) that will serve five major research areas: 1) nuclear structure physics, using radioactive ion beams (RIB), 2) physics of nuclear matter (high energy collisions), 3) physics of antiprotons, 4) atomic physics, and 5) plasma physics.

Manuscript received August 5 2002.

G. Moritz is with GSI, Abteilung BTE, Planckstrasse 1, D-64291, Darmstadt, Germany. (phone: ++49-6159-71-2061; e-mail: G.Moritz@gsi.de)

The facility will consist of:

- a new synchrotron complex, containing two rings, SIS 100 (rigidity 100 Tm) and SIS 200 (rigidity 200 Tm) in the same tunnel, and using the existing UNILAC/SIS18 facility as an injector.
- the new Super FRragment Separator (SFRS)
- the Collector Ring (CR)
- the New Experimental Storage Ring (NESR)
- the High Energy Storage Ring (HESR)

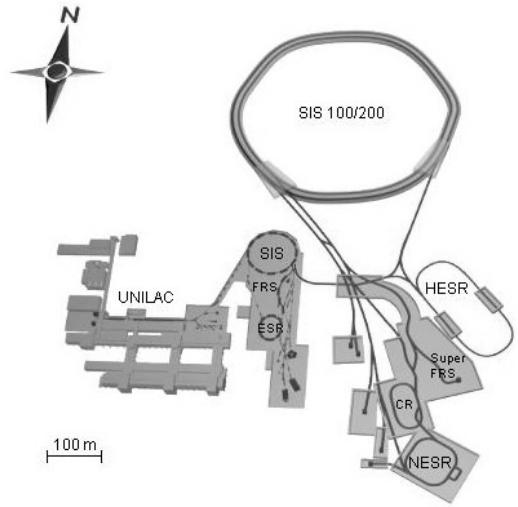

Fig. 1. Layout of the existing GSI facility (left) together with the proposed upgrade (right).

The upgraded facility will deliver:

- Highest beam intensities: 10^{12} U^{28+} per cycle for storage ring and 10^{12} U^{28+} per second for fixed target experiments, $2.5 \cdot 10^{13}$ protons/cycle for antiproton production
- Brilliant beam quality, using different cooling methods
- Higher beam energies (up to 22 GeV/u U and 30 GeV/u Ne)
- Highest beam power for plasma physics ($2 \cdot 10^{12}$ ions in 50 nanoseconds)

It builds on the experience and technological developments already made at the existing GSI facility, and incorporates new technological concepts. The planned schedule and the estimated costs are shown in Fig. 2.

Superconducting magnets will be used in the accelerators in order to reach fields up to 6 Tesla, due to the limited size of the site and to save operating and investment costs. R&D is necessary with the main challenges being: 1) the high ramp rate of the synchrotron magnets needed to reach the desired high beam intensities, and 2) the unavoidable primary beam losses, with the consequences of energy deposition in the magnet and the cryogenic system and irradiation of their components.

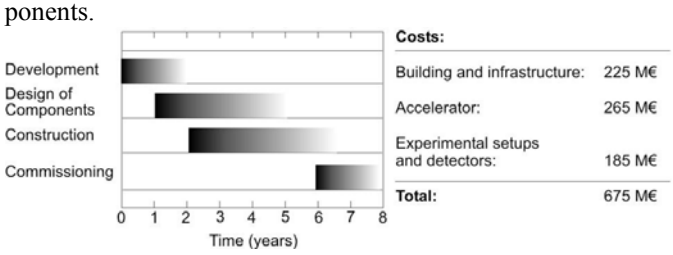

Fig. 2. Proposed schedule of the planned GSI future project.

Due to the difficult R&D and complex demands an international collaboration network is established (see Fig. 3).

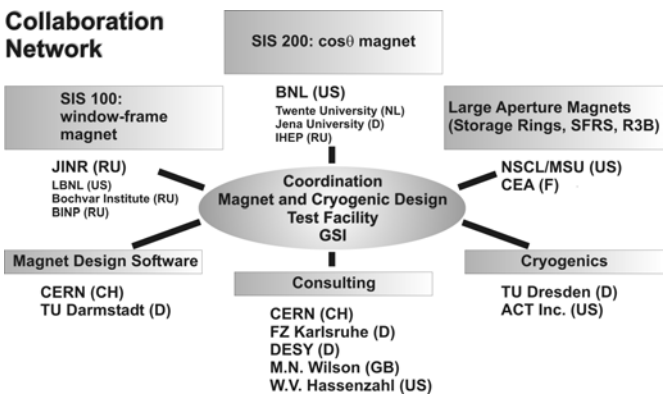

Fig. 3. Established international collaboration network.

The main principle was to start with existing dipoles that come close to meeting our requirements. This way, we are able to use existing material and tooling to save time and money. We started the model dipole R&D program and intend to transfer its results later to quadrupoles, etc. When aperture and field quality requirements will have been defined, the design of full size prototypes can be started.

II. SIS 100/200

A. Overview

The heart of the facility will be the two synchrotrons SIS 100 and SIS 200, both in the same tunnel. They will be situated one above the other. Fig. 4 shows the main features of the synchrotrons, i.e. sixfold symmetry and straight sections filled with RF-systems and injection/extraction/transfer components. SIS 100 will be the "work horse" accelerator, to accelerate the high intensity ion (U^{28+}) and proton beams. Furthermore, SIS 100 provides fast extraction of these beams to produce intense RIB and antiproton beams. SIS 200 will serve as a stretcher ring, with slow extraction only for in-beam experiments with high energy fragment beams, or for fixed target experiments with high energy ion beams.

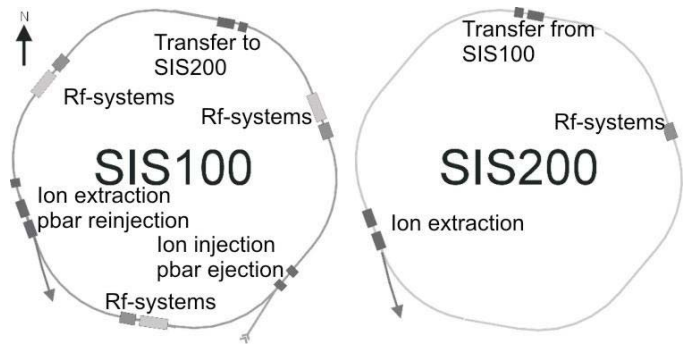

Fig. 4. Main features of SIS 100 and SIS 200.

B. SIS 100

Injection is at 12 Tm in general, or 18 Tm for plasma physics experiments. Table I shows the most relevant parameters of SIS 100 dipoles and quadrupoles.

TABLE I: SIS 100

	Number	Aperture (mm)	Magnet length (m)	Max. field/ Gradient	Max.ramp rate
Dipoles	120	110 x 55	2.6	2 T	4 T/s
Quadrupoles	162	120 x 63	0.6	34.2 T/m	68.4 T/m/s
		(pole radius :	1.0	36.7 T/m	73.4 T/m/s
		40)	0.6	34.2 T/m	68.4 T/m/s

The superferric Nuclotron dipoles have been in operation in the Nuclotron ring at JINR/LHE in Dubna since 1993. All magnets achieved the full ramp rate of 4 T/s. A cross section of the magnet in the cryostat is shown in Fig. 5.

The main magnet features are:

- Window-frame type, 2T
- Thin-walled cold beam pipe, cold iron, 0.5 mm laminations
- Nb-Ti wire, twist pitch 5 mm, filament diameter 10 µm
- Indirectly-cooled "hollow-tube" cable (no helium containment, see Fig. 5)
- Two phase helium
- Low stored energy, low inductance, ramp rate 4 T/s
- AC cryogenic loss at 4 K: 39 W/m (iron: 27 W; coil:12 W) with a triangular cycle (2T, 1 Hz)

The advantages of the Nuclotron superferric window-frame design compared to a coil dominated cosθ design using Rutherford cable are as follows: the high iron contribution to the field means less of superconductor is needed, which depends only on the gap height, but not on the horizontal aperture including the sagitta, therefore the losses in the coil are reduced. Furthermore, the influence of persistent currents on field quality is reduced. The low stored energy reduces power supply and quench protection system costs. Due to the use of the hollow-tube cable, no helium containment of the coil is necessary

and the cable losses are reduced. Furthermore, no special bus bars are needed and the use of a thin-walled beam pipe is possible. In addition, the two-phase cooling is very effective due to the high evaporation heat of helium.

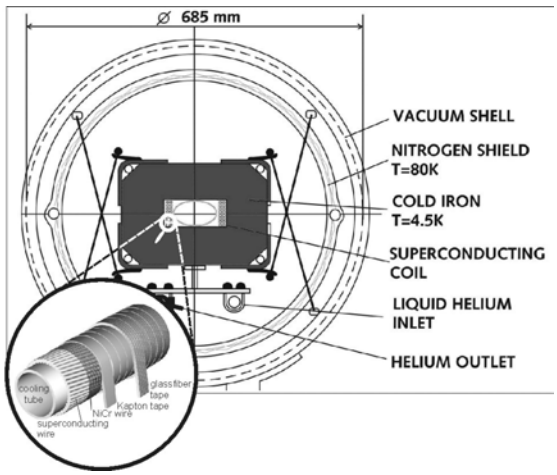

Fig. 5. Cross section of the Nuclotron dipole.

GSI and JINR/LHE have started a joint R&D program, with the following main goals:

- Reduction of AC losses (in iron, coil, beam pipe)
- Improvement of magnet field quality
- Improvement of magnet mechanical performance ($5 \cdot 10^8$ cycles per lifetime)

The main task, of course, is to bring the AC losses down to the goal of at most 13 W/m, as mentioned below. The losses in the coil are well understood, with the main contribution coming from magnetization (see Fig. 6), while the eddy current contribution is small. We plan to reduce the NbTi filament diameter to about 3.5 µm, to reduce magnetization losses.

In order to reduce the losses in the iron, we studied the heat production effects caused by the AC magnetic field. We have also studied reducing the total magnet cold mass to only the mass of the coil, with the iron maintained at an intermediate temperature of 80K.

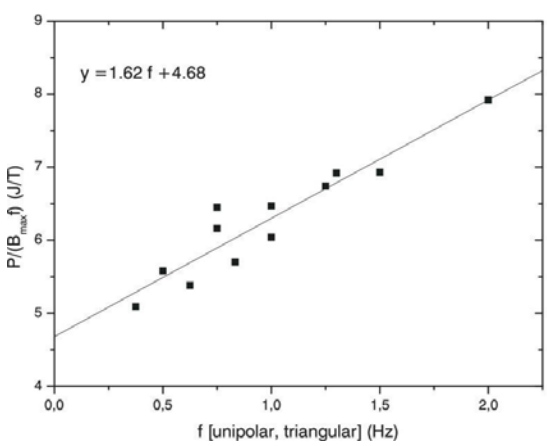

Fig. 6. Dependence of the AC losses in the coil of the 1.4 m long Nuclotron-type dipole on cycle frequency f and maximum field B_{max} of a triangular cycle.

We analyzed the contributions to the iron losses coming from the following parts [2]:

- Magnetization of the core in the magnet center
- Magnetization and eddy currents in the magnet ends, both due to longitudinal field components (see Fig. 7)

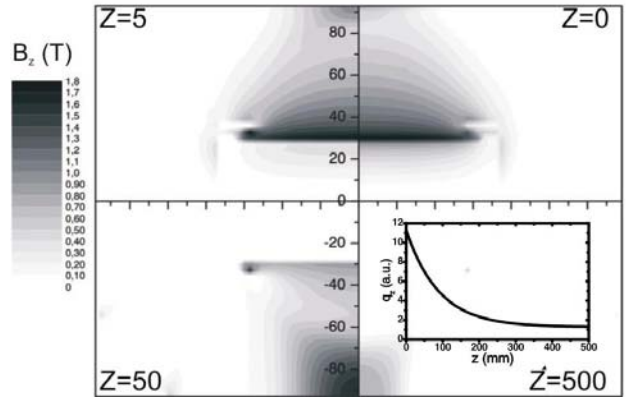

Fig. 7. Distribution of longitudinal field components B_z for B=2T. Four different quadrants are shown for different positions along the z-axis (z=0 mm, i.e. the outermost position, z = 5 mm, 50 mm, and 500 mm, respectively). The inserted figure shows the differential heat production q_z along the z-axis.

A significant amount of additional losses occur in the endmost 20 cm of the magnet, partly due to the longitudinal field component B_z. Intended countermeasures to reduce these losses will be specially laminated end blocks, a Rogowski profile [3]of the pole and nonconductive end plates. Table II shows the presently achieved losses for a 2.6 m long dipole compared to the R&D goals for the standard cycle of 2T, 1 Hz.

Two methods to restrain the cold mass were discussed: 1) wrapping the coil with a stiff glass fiber band or 2) using iron collars. The first method has been tried, resulting in a reduction of quench current and therefore reduced magnet stability [4], [5]. The second method is still in the design phase.

TABLE II: LOSSES AT 4 K FOR A 2.6 M LONG DIPOLE, SCALED FROM MEASUREMENTS OF 1.4 M LONG MODEL MAGNETS (*17 W/M SCALED CONSIDERING END EFFECTS).

loss (W/m)	Nuclotron	4K-iron	80K-iron	Goal
total	44	37	11	13
in the yoke	>27	24*	0	
in the coil	12	9	9	
static	5	4	2	

It is not quite obvious that a superconducting rather than a normal conducting magnet design is the best choice for a fast pulsed, low field dipole. Before starting into the R&D phase of a superferric dipole, we compared investment and operating costs for a resistive dipole version with the Nuclotron dipole. Table III shows the results for a triangular cycle (2 T, 1 Hz) based on the assumption of 13 W/m AC loss.

TABLE III: COST COMPARISON RESISTIVE VS. SUPERFERRIC DIPOLES FOR SIS 100.

	Resistive	Superferric

	Resistive dipole	Superferric Nuclotron dipole
Investment	comparable	
Operation per year	2.05 M€	0.9 M€

Following discussions about possible advantages of a warm beam pipe, we considered the design of a warm bore/warm iron dipole. This magnet would be of the H-type. Fig. 8 shows a preliminary cross section in comparison with the Nuclotron design. Both magnets have a good field region of 110 mm with $\pm 6 \cdot 10^{-4}$ relative field accuracy). The main advantages of the H-type magnet design are the simple race track coil and the lower radiation exposure of the coil. Furthermore, for the case of a sufficiently large coil window, e.g. if warm iron is used, the field at the coil is reduced, resulting in lower coil losses. Also, fiducialization is easier for a warm iron magnet design. On the other hand, the dimensions of the yoke are much larger in both directions, vertically due to the racetrack geometry and horizontally due to the use of warm iron. The pole overhang requires a wider pole and therefore the yoke is further enlarged. This increases the stored energy and therefore the pulsed power and voltage. A detailed study of such a design is in progress at BINP, Novosibirsk.

C. SIS 200

The SIS 200 will accelerate ions to the highest possible energies for nuclear collision experiments and will serve as a stretcher ring, with slow extraction. The ramp rate will be 1 T/s. Ion injection will be at 0.5 T. The main parameters of the dipoles and quadrupoles are given in Table IV.

TABLE IV: MAIN PARAMETERS OF THE MAGNETS FOR SIS 200.

	Number	Coil Aperture (mm)	Magnet length (m)	Max. field/ gradient	Ramp rate
Dipoles	120	80 (circular)	2.6	4 T	1 T/s
Quadrupoles	132	80 (circular)	0.6	62 T/m	15.5 T/m/s
			1.0	59 T/m	14.8 T/m/s

The existing RHIC arc dipole design comes close to our requirements, with the exception of the magnetic field ramp rate. Fig. 9 shows a cross section of the dipole. Its main features are:

- Coil-dominated cosθ type magnet, no collars
- NbTi-Cu composite wire (twist pitch 13 mm, filament diameter 6 μm)
- Rutherford cable
- Supercritical helium cooling
- 3.5 T, 0.042 T/s

Given the much higher magnetic field ramp rate required for the GSI application, GSI and BNL have started a joint R&D program to minimize eddy and persistent currents, in order to achieve good field quality and to reduce AC losses.

There is always a tradeoff between eddy current minimization and reduced stability, due to a lack of current-sharing capability between strands. Calculations of losses and field quality with the expected parameters showed that such a magnet should be feasible [6]. The magnet's iron core will be built of 0.5 mm thick, low coercivity 3.5 % silicon steel laminations that will be glued together. The main effort, however, was expended on wire and cable R&D: The twist pitch of existing RHIC wire was reduced, first to 6, and then to 4 mm with no observable degradation.

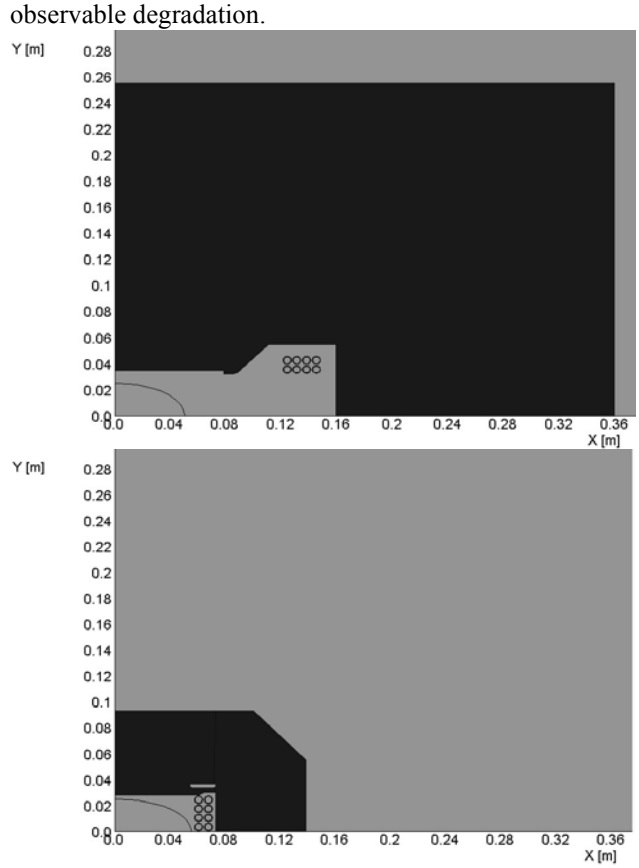

Fig. 8. Comparison of H-type (upper part) and Nuclotron-type dipole (lower part).

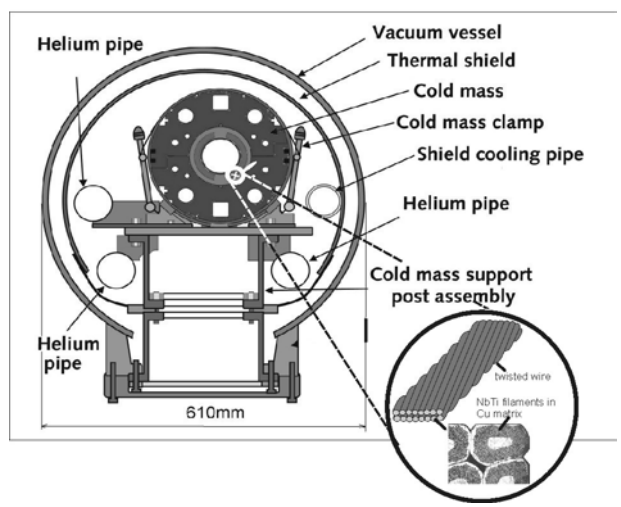

Fig. 9. Cross section of a RHIC dipole.

The wire was annealed and coated with Stabrite. The rate dependence of the magnetization and the AC losses of cable stacks made with this wire were measured at Twente University [7]. The coupling current time constant calculated from these wire measurements was in good agreement with the predicted one [8]. The measured cable losses were in good

agreement with those calculated for the sum of intrastrand loss and interstrand loss [6], based on measured crossover resistance and adjacent wire resistance data [9]. Based on these loss data, GSI chose a Rutherford-cable with a stainless steel core, consisting of two 25 µm AISI 304 stainless steel foils, for the model magnet.

Table V shows the calculated cryogenic losses of the existing RHIC magnet and what we expect for the 2.6 m long SIS RHIC-type dipole for a GSI synchrotron cycle (B_{min}=0.4 T, B_{max}=4 T, 1 T/s, extraction time: 5s) [6], [10]. Transverse and parallel refer to magnetic field direction, while crossover and adjacent refer to inter-wire resistances.

TABLE V: AC LOSSES OF RHIC-TYPE DIPOLE IN WATT/M

Loss at 4 K		RHIC	SIS RHIC
Beam pipe		0.4	0.4
Iron core		1.2	0.5
Coil losses consisting of:	100%	13.1	3.0
• *Transverse cross-over*		51.9%	1.0 %
• *Transverse adjacent*		2.9%	18.8%
• *Parallel*		0.0%	0.2%
• *Filament coupling*		29.8%	12.4%
• *Hysteresis*		15.4%	67.6%

One can see, that the main loss contribution in the coil comes from the wire magnetization (hysteresis loss). This can be reduced by reducing the filament size. Thus, we ordered an industrial-size wire billet with 3.5 µm filament size, the minimum sized filament to avoid the ”proximity coupling”-effect ([6], [11]).

The contribution of the iron core to AC loss does not take into account losses created in the ends of the magnet due to longitudinal field components. According to our experience with the Nuclotron dipole (see above), this contribution can be substantial.

Despite all these efforts to reduce losses calculations show, that the temperature increase of the conductor could be too high for safe magnet operation. The main reason for this is the poor heat transfer from conductor to the helium coolant, through the Kapton cable insulation. We therefore decided to improve this heat transfer by cutting holes in the insulation at the inner edge of the cable. Holes of 0.75 mm x 2.25 mm elliptical size (25% of total cable inner edge area) are cut out with a laser after the cable is insulated. A test coil was built and voltage tests have shown an acceptable minimum turn-to-turn breakdown voltage of 1200 Volts.

Two additional changes were made in the coil design: The insulating spacer between the coil and iron yoke was replaced by stainless steel collars (with G10 CR keys) for reasons of mechanical stability, and the copper wedge spacers inside the the coil winding were replaced by ones made of G10 CR.

We expect to have a 1m model dipole built and tested by the end of 2002.

D. SIS 300

Though not mentioned in the present conceptual design report yet, physicists have been asking for higher energies in the SIS 200. The desired rigidity was therefore increased to 300 Tm. Consequently, the magnet group was asked to develop a 6 T, rather than 4 T dipole, with the same ramp rate of 1 T/s. The two layer coil UNK dipole, designed and produced at IHEP, comes closest to meeting our requirements [12]. We would like to transfer the R&D results we have obtained during R&D on the one layer RHIC dipole to this dipole. A feasibility study is in progress.

III. SFRS, CR, NESR

The primary beam from SIS 100 hits the target and produces fragments, which are separated in the SFRS, and can be used for in-flight experiments or, after having been collected and cooled in the CR, can be injected into the NESR for further experimental studies. Antiprotons are created in the antiproton target and treated the same way as RIB in the CR and NESR.

Table VI gives the parameters of the main magnets of SFRS, CR and NESR. These are all magnets with rather moderate fields and large apertures, necessary to accept the secondary beams. While the SFRS and the CR are operated in DC modes, the NESR requires a dipole ramp rate of 1 T/s.

TABLE VI: PARAMETERS OF THE MAGNETS FOR SFRS, CR AND NESR.

	Number	Aperture (mm)	Eff.. mag. length	Dipole radius (m)	Max. field /gradient	Ramp rate
Dipoles SFRS (28°)	6	140	6.1 m	12.5	1.6 T	0
Quadrupoles SFRS	36	120 160 300 380	0.8 0.8 1.2 0.8		25.1 T/m 17.5 13.3 10.5	0
Dipoles CR (15°)	8 16	360 x 140 220 x 140	2.13	8.125	1.6 T	0
Quadrupoles CR	13 39	380 x 160 230 x 160	0.75 0.75		8.6 T/m 5.8 T/m	0
Dipoles NESR (15°)	24	220 x 70	2.13	8.125	1.6 T	1 T/s
Quadrupoles NESR	32	256	0.82		7.1 T/m	4.4 T/m/s

In principle, all these magnets could be designed as resistive magnets. The main advantage of resistive magnets is the smaller engineering effort. Neither cryogenics, cryostats and quench detection and protection, nor complex coil restraint are necessary. On the other hand, superferric magnets are advantageous due to operation with high current density and the ability to operate economically with saturated iron. In addition they have lower power consumption and allow the use of low-current power supplies. In summary, inexpensive amp-turns allow higher fields and larger apertures.

The final choice between resistive and superferric magnet designs will be determined by cost, which must include both capital and long-term operation costs.

Once the decision for a superferric magnet is made, one has to choose between using a cable or a wire conductor. This is a tradeoff between higher losses in the leads (for a cable) and high magnet inductance (for wire). Table VII compares different conductor types (CICC means cable in conduit conductor).

Another choice is between using warm or cold iron, either solid or laminated (more cost effective and necessary for steel mixing). Cold iron/cold beam pipe can help with beam pipe pumping, providing a minimum mass solution, as well as being useful for taking up the forces on the coil. But it has disadvantages: Besides the large amount of iron that must be cooled down and kept cold, heat produced by ramping losses or radiation is transmitted to the refrigerator and transitions to room temperature to access diagnostic components are complex.

TABLE VII: FEATURES OF DIFFERENT CONDUCTOR TYPES. (*POTTED COIL)

	Rutherford	CICC	'Nuclotron'	Wire
He-containment required	Yes	No	No	Yes
Multipole inserts possible	Yes	No	No	Yes
Direct helium contact	Yes	Yes	No	No*
Heat input	Low	Medium	High	Low
Difficulty to wind coil	High	High	Medium	Low

The A1900 Fragment Separator (NSCL, MSU) with superferric magnets of large apertures comes closest to our requirements [13]. NSCL prepared a study for GSI, discussing the different design options for these magnets and investigating the pros and cons of the respective solution [14]. Special attention was paid to the high radiation load to which the first magnets of the SFRS downstream of the target are exposed to.

IV. HESR

The HESR serves as the experimental storage ring for experiments with antiprotons at high energies. Rigidity is 50 Tm. Table VIII gives the main parameters of its dipoles and quadrupoles.

TABLE VIII: MAIN MAGNET PARAMETERS FOR HESR.

	Number	Aperture diameter (mm)	Magnet length (m)	Dipole bending radius	Max. field / gradient	Ramp rate
Dipole (7.5°)	48	30 x 24	1.64	12.5 m	4 T	DC
Quadrupole	90	40 (circular)	0.5		35 T/m	DC

The main problem is the small (12.5 m) bending radius of the dipoles. The construction of a curved cosθ dipole is quite complicated [15]. We intend to use a short, one layer dipole (1.64 m long), adding the sagitta of 26.8 mm to the required horizontal aperture of 30 mm.

V. RELATED WORK

A. Primary beam loss

Due to the high beam intensities, primary beam loss of protons and ions is of great importance for the design and operation of the magnets [16]. Beam loss occurs either at local hot spots (e.g. during slow extraction) or is distributed over the ring (e.g. due to charge exchange in collisions with the rest gas), in very short times (< 1 msec during fast bunch compression) or during the whole cycle. Possible consequences of the beam loss are:

1. Increase of overall heat load on the refrigerator
2. Magnet quench due to energy deposition in the coil
3. Limited lifetime of components due to high radiation doses
4. Activation of components
5. Reduced critical current due to high radiation doses
6. Limited lifetime of cold diodes
7. Destruction of the superconductor due to ion tracks
8. Vacuum problems due to desorption

Because of their large electronic stopping power per nucleon, heavy ions deposit most of their energy in heat before nuclear reactions become effective. The range for uranium of 1 GeV/u in stainless steel is 10 mm. Due to the small impact angle, all primary ions are stopped within one mm thickness or less. Thus, no damage occurs to the magnet, but in case of a cold bore, the heat is dumped into the cryogenic system.

The situation is different for protons in the GeV-range. Here, the range is of the order of meters. Even with a small incident angle, the penetration depth is some centimeters. Thus, the energy is dumped in the magnet coil, leading to the consequences 1-6 mentioned above. A careful quantitative analysis of the loss mechanisms is necessary to check which measures are necessary. In any case, collimation of the beam is necessary. In some areas, e.g. behind the target areas, where the total beam is lost, special measures have to be taken.

ACKNOWLEDGMENT

The author gratefully acknowledges the contributions of individuals, too numerous to name, from the many institutions and other organizations involved in this project. Thanks to all!

REFERENCES

[1] Conceptional Design Report for the GSI Future Project, 2002, http://www.gsi.de/GSI-Future/cdr/
[2] A. Kovalenko et al., these proceedings
[3] W. Rogowski, Archiv für Elektrotechnik, Bd. XII-1, 1, 1923
[4] N. Agapov et al., Proceedings of MT-17, Geneva, 2001
[5] A. Kovalenko et al., Proc. of EPAC 2002, Paris, submitted for publication
[6] M.N. Wilson, GSI Internal Report, *AC loss calculations of a RHIC-type cosθ magnet for SIS 200*, 2001, part 1-10
[7] A. den Ouden, W.A.J. Wessel, H.J.G. Krooshoop, U. Twente Report UT-GSI 01-01, 2002, Calorimetric loss measurements of NbTi Rutherford cables for fast pulsed magnets
[8] J. Kaugerts, GSI Internal Technical Report No. 2, 2002, Superconducting strand current coupling constant
[9] R. Soika et al., these proceedings
[10] M.N. Wilson et al., these proceedings
[11] A. Ghosh, W.B. Simpson, IEEE Trans. Mag. Vol. Mag-23, No. 2, 1724, 1987
[12] L. Tkachenko et al., Proc. of EPAC 2002, Paris, submitted for publication
[13] A.F. Zeller et al, Advances in Cryogenic Engineering, 43A, 245, 1998

[14] A.F. Zeller, Study on the use of superferric magnets for the proposed GSI upgrade, GSI Internal Report, 2002
[15] T. Shintomi, private communication
[16] O. Boine-Frankenheim, Proc. of EPAC 2002, Paris, submitted for publication